When It Comes To Fulfilling A Complete Range Of Lighting Requirements Formed Plastics Outshines Them All.

For the highest quality post top globes, spheres or refractors, we're the company to turn to.

SPHERES Ultra clear injection blow molded spheres available in acrylic and polycarbonate from 6" to 24" in diameter. Rotational molded polyethylene spheres available from 6" to 36" diameter.

POST TOP GLOBES Nostalgic "acorn globes." Most models are blow molded offering superior appearance and impact strength and are available in polycarbonate and high impact acrylic. Requirements for photometric performance and controlled up light for dark sky can be satisfied using our prismatic post top globes.

REFRACTORS Many styles of pendant refractors available from stock. Refractors are manufactured in acrylic and polycarbonate in a variety of light patterns.

FORMED PLASTICS, INC.
207 Stonehinge Lane
Carle Place, NY 11514
Tel 516 334-2300
Fax 516 334-2679
www.formedplastics.com

Post Top Globes

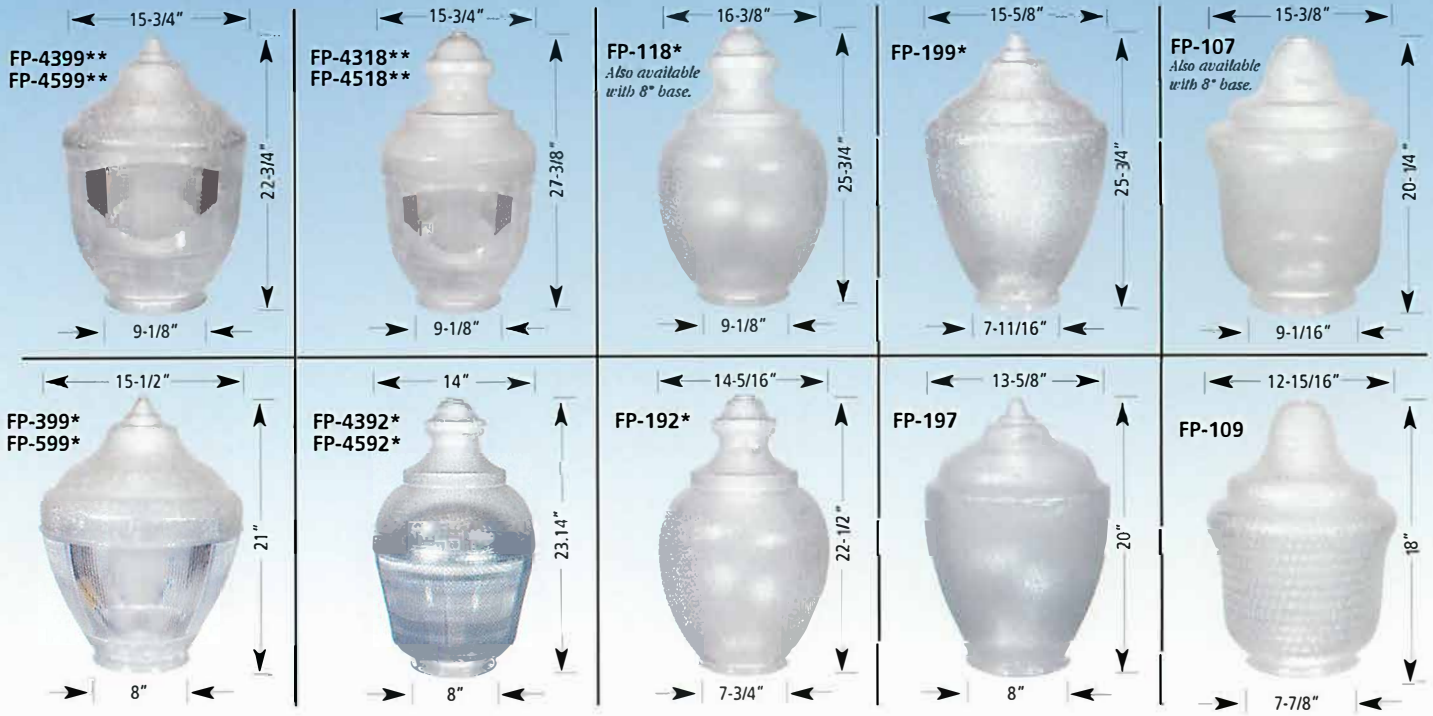

*Available in Acrylic. **9-1/8" neck can be converted for use with an 8" post top by using Formed Plastics FP-3715-4 reduction adapter.

Pendant Type Refractors

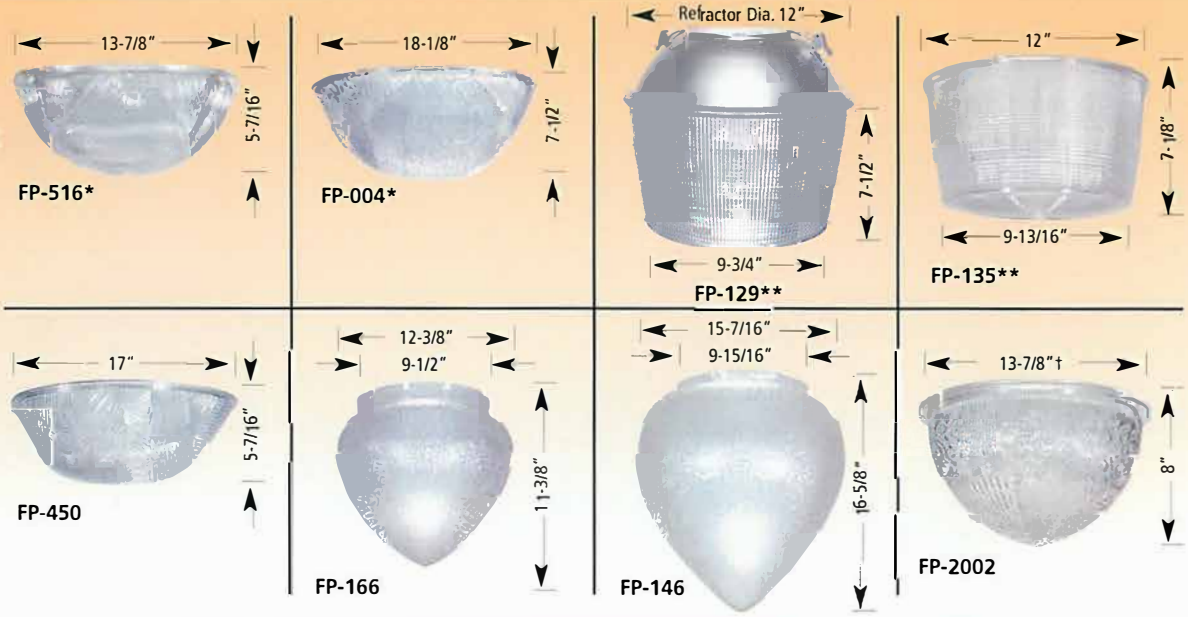

*Available in Acrylic.

**Available with open or closed bottom (with or without reflector) in Acrylic or Polycarbonate.

†Can be cut to size.

Spheres

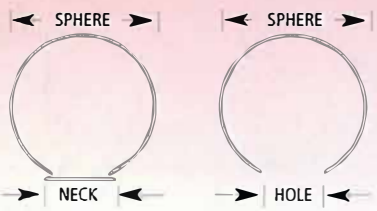

*All spheres are molded with a neck. Optional hole available at no extra cost. See minimum hole sizes in chart at right.

INJECTION BLOW MOLDED Polycarbonate or Acrylic				
SPHERE	NECK	OR	SPHERE	MIN HOLE SIZE
6"	3-1/4"		6"	3"
8"	4"		8"	3-3/4"
10"	4"		10"	3-3/4"
12"	5-3/4"		12"	5-1/4"
14"	5-7/8"		14"	4-7/8"
16"	5-7/8"		16"	4-7/8"
18"	5-7/8" or 7-1/2"		18"	4-7/8" or 6-5/8"
20"	7-1/2"		20"	6-5/8"
22"	9-3/16"		22"	8-1/2"
24"	9-3/16"		24"	8-1/2"

ROTATIONALLY MOLDED Polyethylene				
SPHERE	NECK	OR	SPHERE	MIN HOLE SIZE
6"	3-1/4"		6"	3"
8"	4"		8"	3-3/4"
10"	4"		10"	3-5/8"
12"	4"		12"	3-1/4"
14"	6"		14"	1-1/8"
16"	5-7/8"		16"	5"
18"	8"		18"	1-1/8"
20"	8"		20"	3/4"
22"	N/A		22"	1-1/4"
24"	5-7/8"		24"	5-1/8"
30"	N/A		30"	1"
36"	N/A		36"	1-1/4"

FORMED PLASTICS, INC.
207 Stonehinge Lane • Carle Place, NY 11514 • 516 334-2300 • Fax 516 334-2679 • www.formedplastics.com

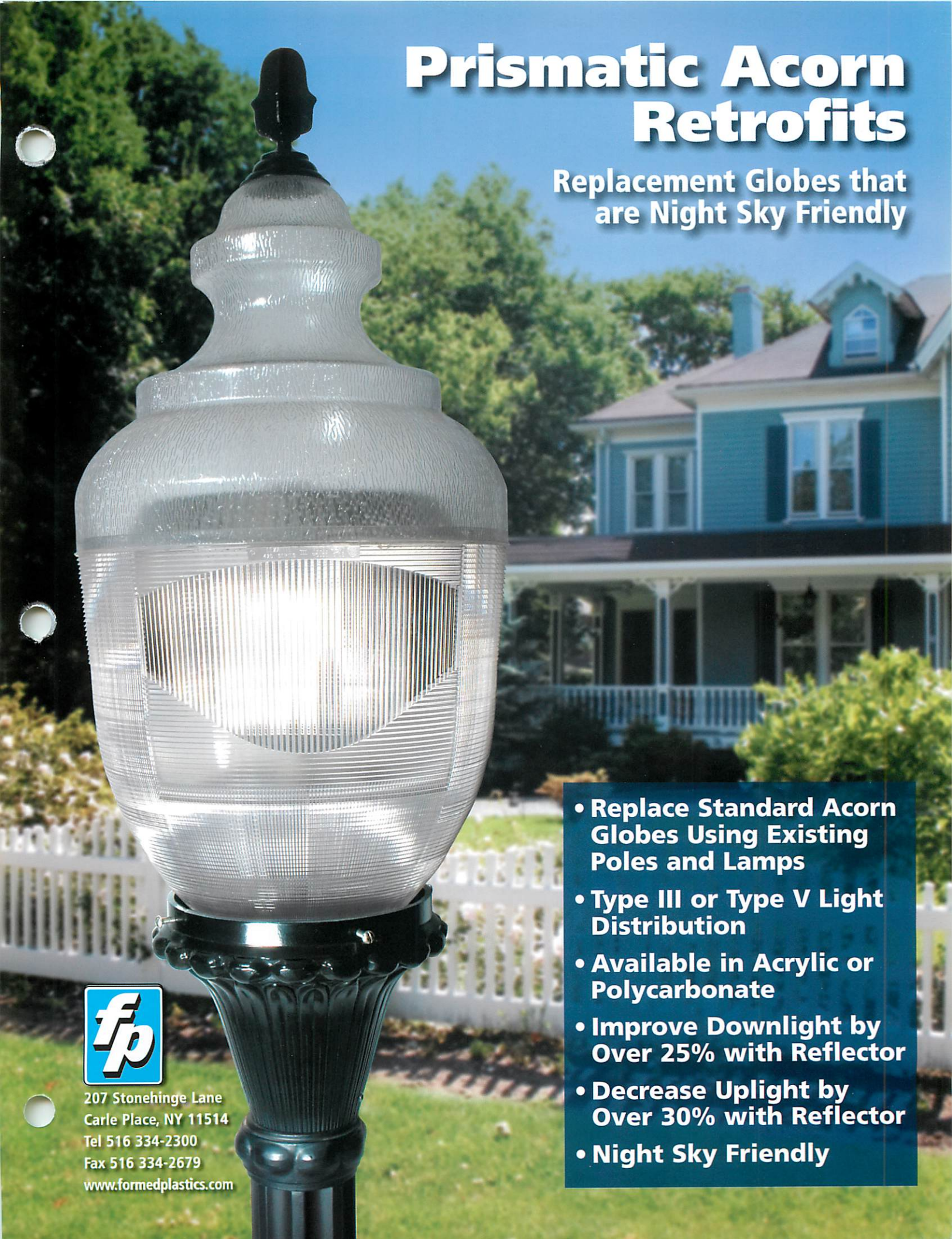
Prismatic Acorn Retrofits
Replacement Globes that are Night Sky Friendly
• Replace Standard Acorn Globes Using Existing Poles and Lamps
• Type III or Type V Light Distribution
• Available in Acrylic or Polycarbonate
• Improve Downlight by Over 25% with Reflector
• Decrease Uplight by Over 30% with Reflector
• Night Sky Friendly
fp
207 Stonehinge Lane
Carle Place, NY 11514
Tel 516 334-2300
Fax 516 334-2679
www.formedplastics.com

Prismatic Acorn Retrofit Globes – Acrylic or Polycarbonate

Need Replacement Globes?

Build your own assembly.

- **All of our Prismatic Acorn Retrofit Globes are offered in a Type III and V**
- **Litelid optional**
- **Available with an 8" base**

207 Stonehinge Lane • Carle Place, NY 11514 • Tel 516 334-2300 • Fax 516 334-2679 • www.formedplastics.com

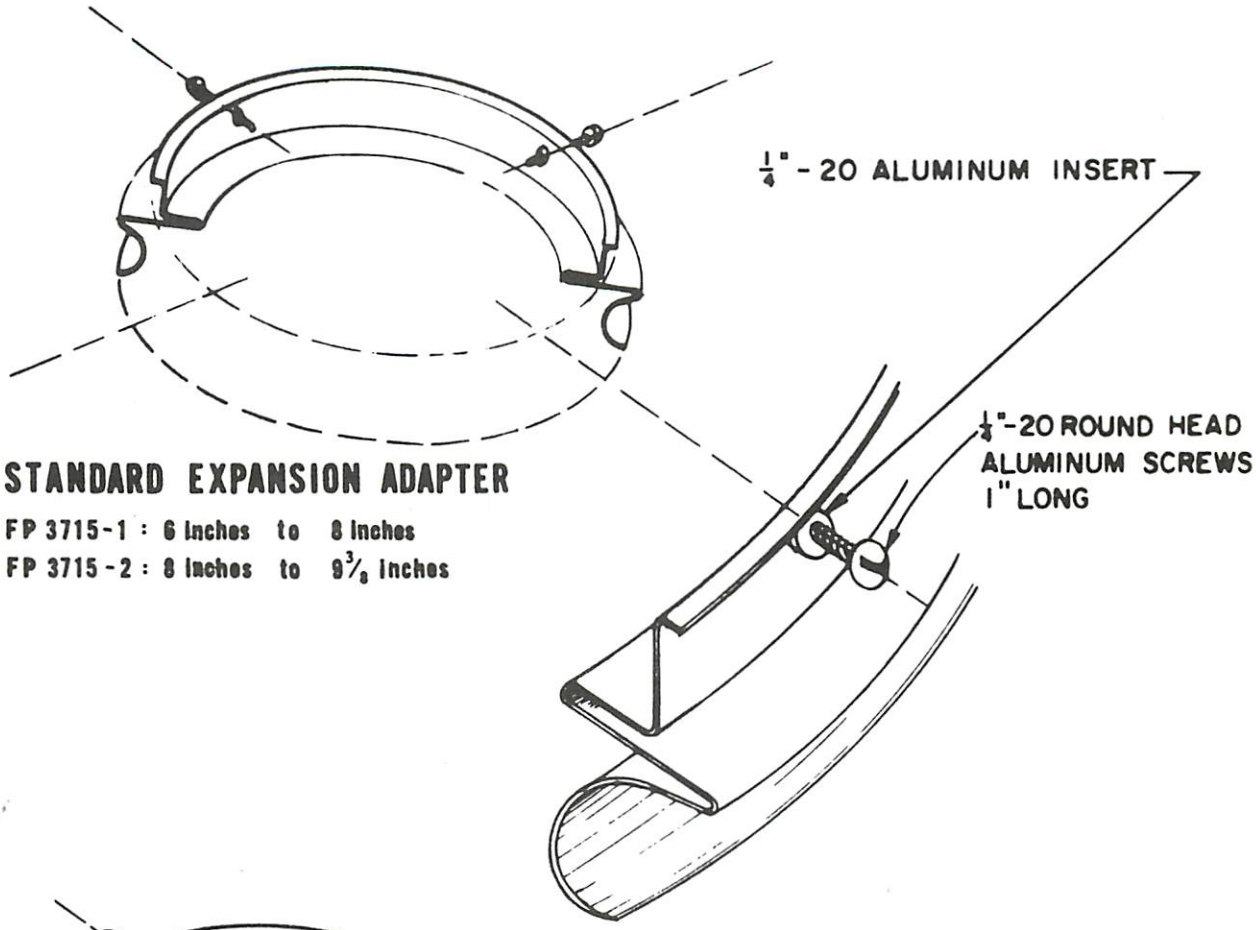

STANDARD EXPANSION ADAPTER

FP 3715-1 : 6 inches to 8 inches
FP 3715-2 : 8 inches to 9 3/8 inches

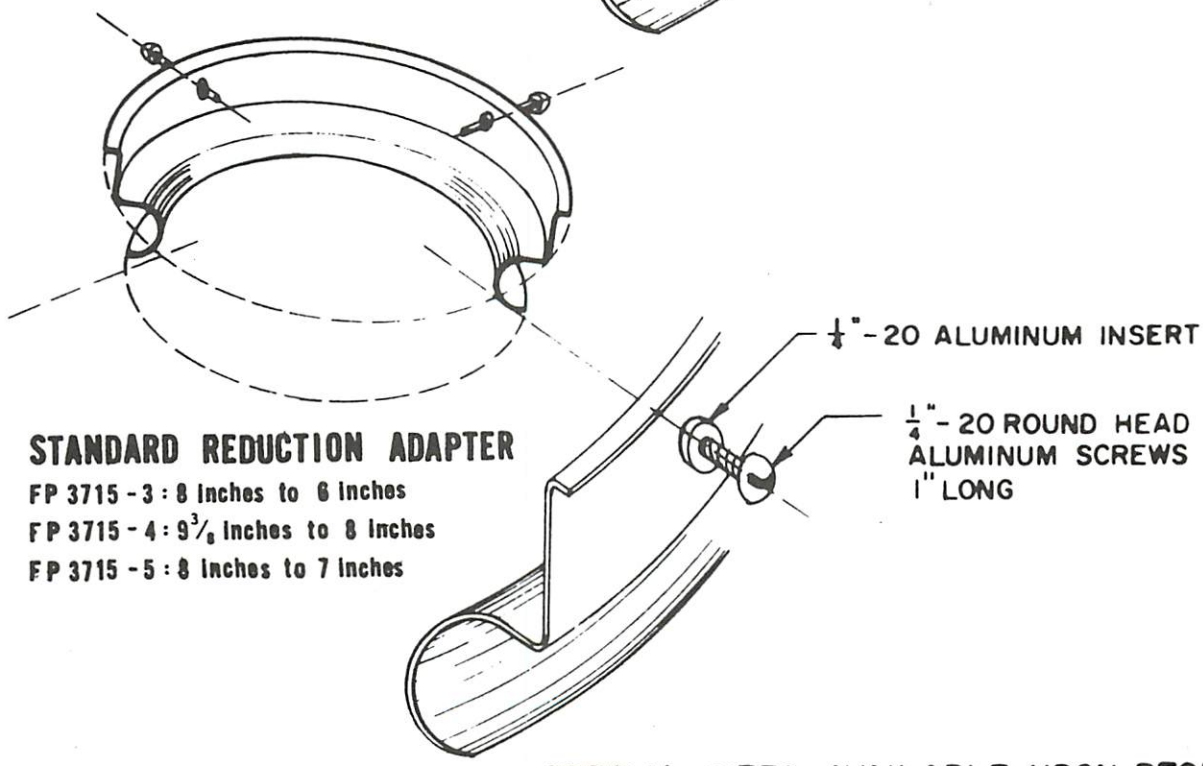

STANDARD REDUCTION ADAPTER

FP 3715 - 3 : 8 inches to 6 inches
FP 3715 - 4 : 9 3/8 inches to 8 inches
FP 3715 - 5 : 8 inches to 7 inches

SPECIAL SIZES AVAILABLE UPON REQUEST

ADAPTERS GRADE 1100 ALUMINUM	FORMED PLASTICS, INC. 207 STONEHINGE LANE CARLE PLACE, L.I.N.Y. 11514 516 / 334-2300	Date 7/1/77 Part No. FP 3715

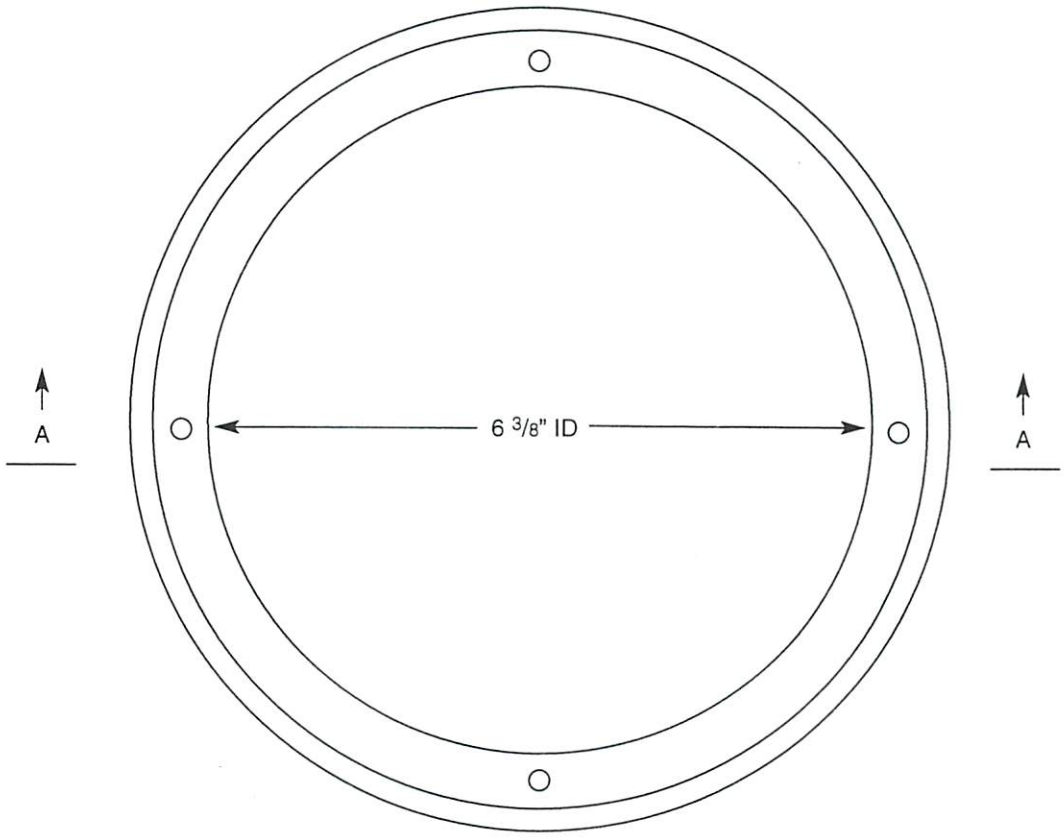

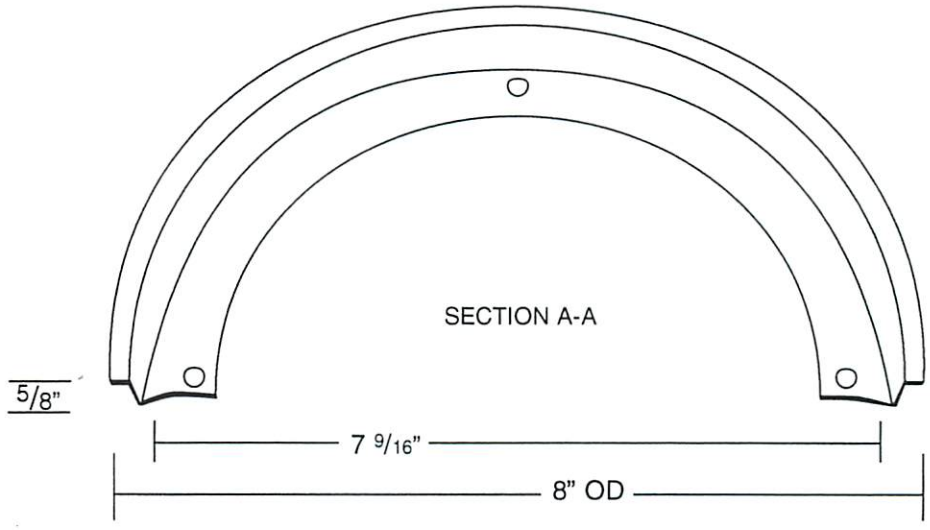

8" Neck Adaptor for spheres Material: Aluminum 050	**FORMED PLASTICS INC.** 207 STONEHINGE LANE CARLE PLACE, L.I., N.Y. 11514 516/334-2300	Date 9/17/98 Part No. FP 3715-9

FORMED PLASTICS INC.
207 STONEHINGE LANE, CARLE PLACE, NEW YORK / 11514-1743
516 334-2300 • FAX 516 334-2679 • www.formedplastics.com

SUGGESTED MAXIMUM WATTAGES-SPHERES

	POLYETHYLENE		ACRYLIC		POLYCARBONATE(LEXAN)	
	INC.	HPS OR MV	INC	HPS OR MV	INC.	HPS OR MV
6"	40	-	-	-	75	-
8"	75	-	60	-	100	50
10"	100	-	60	-	150	75
12"	150	-	100	-	200	100
14"	200	-	100	50	200	100
16"	200	-	150	75	300	175
18"	250	75	200	100	400	250
20"	300	75	300	175	500	250
22"	400	175	300	175	750	400
24"	400	175	300	175	750	400
30"	750	250	-	-	1000	400
36"	1000	400	-	-	1000	40

NOTES

1. This wattage chart is for use as a general chart only. No warranty or guarantee is expressed or implied as only the user can determine the stability of a product for this purpose.
2. Actual wattage ratings are influenced by many factors including Fixture, Type, Bulb Location and Ambient Temperature.
3. The center of the light source should be located at the center of the sphere.

POLYCARBONATE* & ACRYLIC**

STREET LIGHT GLOBES

PENDANT TYPE REFRACTORS

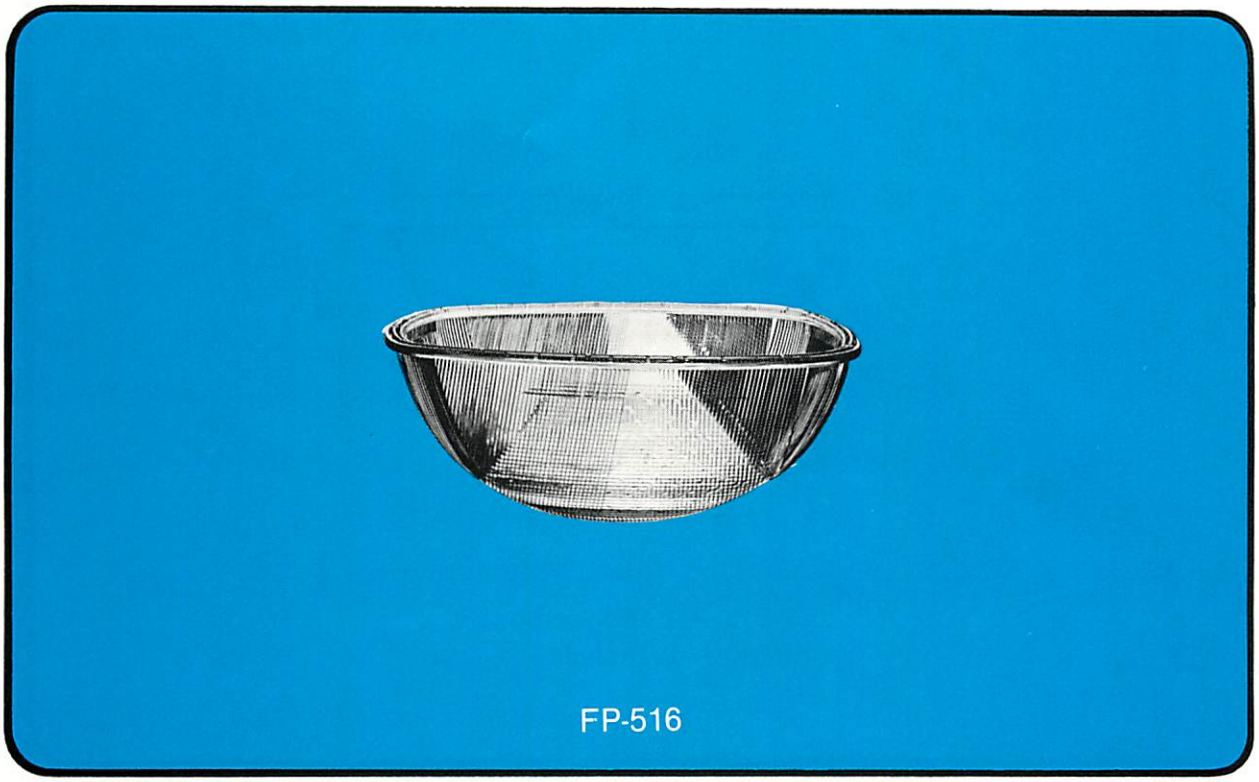

FP-516

FEATURES:

- ☐ High impact strength
- ☐ Shatter proof
- ☐ Glasslike appearance
- ☐ Lightweight (75% lighter than glass)
- ☐ Excellent light transmission
- ☐ Ultra-violet stabilized
- ☐ Reduces vandalism
- ☐ Eliminates hazards of broken glass

*LEXAN — GENERAL ELECTRIC CO.
MERLON — MOBAY CHEMICAL CO.

**PLEXIGLAS — ROHM & HAAS CO.
LUCITE — DUPONT

FORMED PLASTICS INC. 207 Stonehinge Lane • Carle Place, L.I., N.Y. 11514 • (516) 334-2300

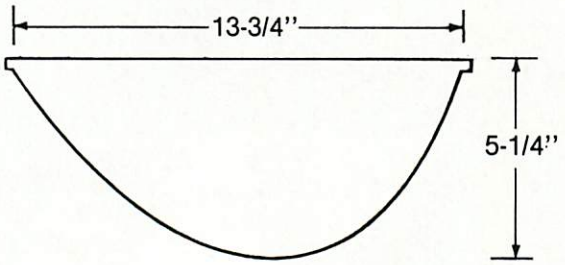

width; 11-1/2"

FP-516 — 1 - Polycarbonate
FP-516 — 2 - Acrylic

FP-516

(All dimensions shown are nominal)

FORMED PLASTICS INC.
207 STONEHINGE LANE
CARLE PLACE, L.I., N.Y. 11514
(516) 334-2300

REPRESENTED BY:

POLYCARBONATE* & ACRYLIC** STREET LIGHT GLOBES

PENDANT TYPE REFRACTORS

Replacement Refractor for
GE M-400A Luminaire

FP-004

FEATURES:

- ☐ High impact strength
- ☐ Shatter proof
- ☐ Glasslike appearance
- ☐ Lightweight (75% lighter than glass)
- ☐ Excellent light transmission
- ☐ Ultra-violet stabilized
- ☐ Reduces vandalism
- ☐ Eliminates hazards of broken glass

*LEXAN — GENERAL ELECTRIC CO.
MERLON — MOBAY CHEMICAL CO.

**PLEXIGLAS — ROHM & HAAS CO.
LUCITE — DUPONT

FORMED PLASTICS INC. 207 Stonehinge Lane • Carle Place, L.I. N.Y. 11514 • (516) 334-2300

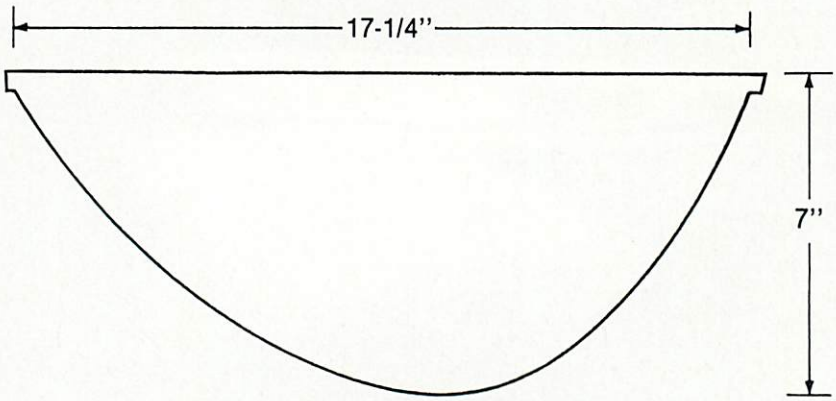

width; 13-5/8"

FP-004 — 1 - Polycarbonate
FP-004 — 2 - Acrylic
FP-004

(All dimensions shown are nominal)

FORMED PLASTICS INC.
207 STONEHINGE LANE
CARLE PLACE, L.I., N.Y. 11514
(516) 334-2300

REPRESENTED BY:

POLYCARBONATE* STREET LIGHT GLOBES

PENDANT TYPE REFRACTORS

FP425W

Polycarbonate replacement
for Westinghouse 400 watt
OV-25 luminaire

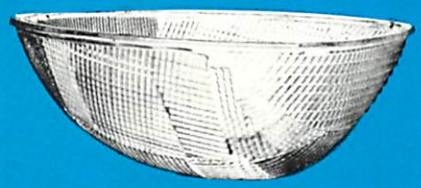

FP450

Polycarbonate replacement
for ITT-American Electric, Mc Graw
Edison and Pemco 400 watt luminaire

FEATURES:

- ☐ High impact strength
- ☐ Shatter proof
- ☐ Glasslike appearance
- ☐ Lightweight (75% lighter than glass)
- ☐ Excellent light transmission
- ☐ Ultra-violet stabilized
- ☐ Reduces vandalism
- ☐ Eliminates hazards of broken glass

*LEXAN— GENERAL ELECTRIC CO.
MERLON– MOBAY CHEMICAL CO.

FORMED PLASTICS INC. 207 Stonehinge Lane • Carle Place, L.I., N.Y. 11514 • (516) 334-2300

DIMENSIONS:

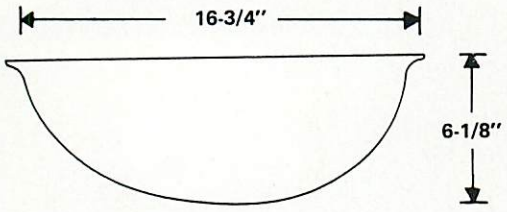

width; 14-1/2"

FP 425W

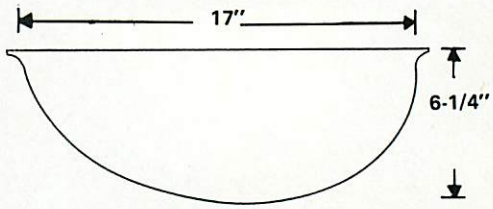

width; 12-3/4"

FP 450 MAP

(All dimensions shown are nominal)

FORMED PLASTICS INC.
207 STONEHINGE LANE
CARLE PLACE, L.I., N.Y. 11514
(516) 334-2300

REPRESENTED BY:

POLYCARBONATE* STREET LIGHT GLOBES

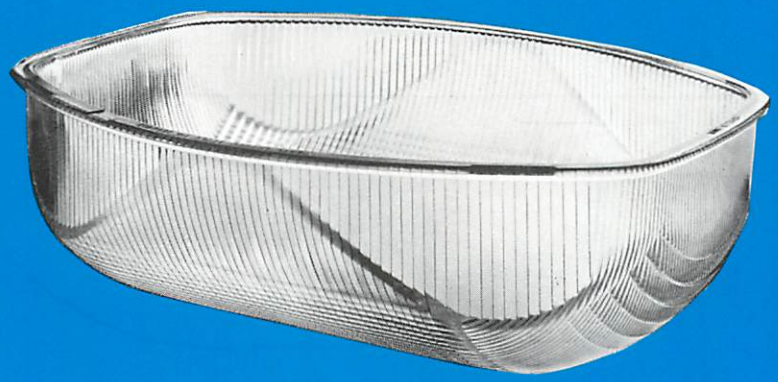

FP 420W

Polycarbonate replacement
for
Westinghouse OV20 glassware

FEATURES:

- ☐ High impact strength
- ☐ Shatter proof
- ☐ Glasslike appearance
- ☐ Lightweight (75% lighter than glass)
- ☐ Excellent light transmission
- ☐ Ultra-violet stabilized
- ☐ Reduces vandalism
- ☐ Eliminates hazards of broken glass

*LEXAN— GENERAL ELECTRIC CO.
MERLON– MOBAY CHEMICAL CO.

FORMED PLASTICS INC. 207 Stonehinge Lane • Carle Place, L.I., N.Y. 11514 • (516) 334-2300

DIMENSIONS:

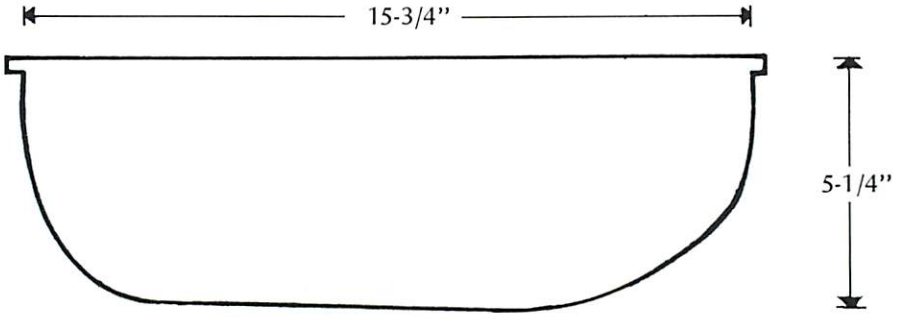

width; 11-1/4"

FP-420W

(All dimensions shown are nominal)

FORMED PLASTICS INC.
207 STONEHINGE LANE
CARLE PLACE, L.I., N.Y. 11514
(516) 334-2300

REPRESENTED BY:

POLYCARBONATE* & ACRYLIC**
STREET LIGHT GLOBES
PENDANT TYPE REFRACTORS

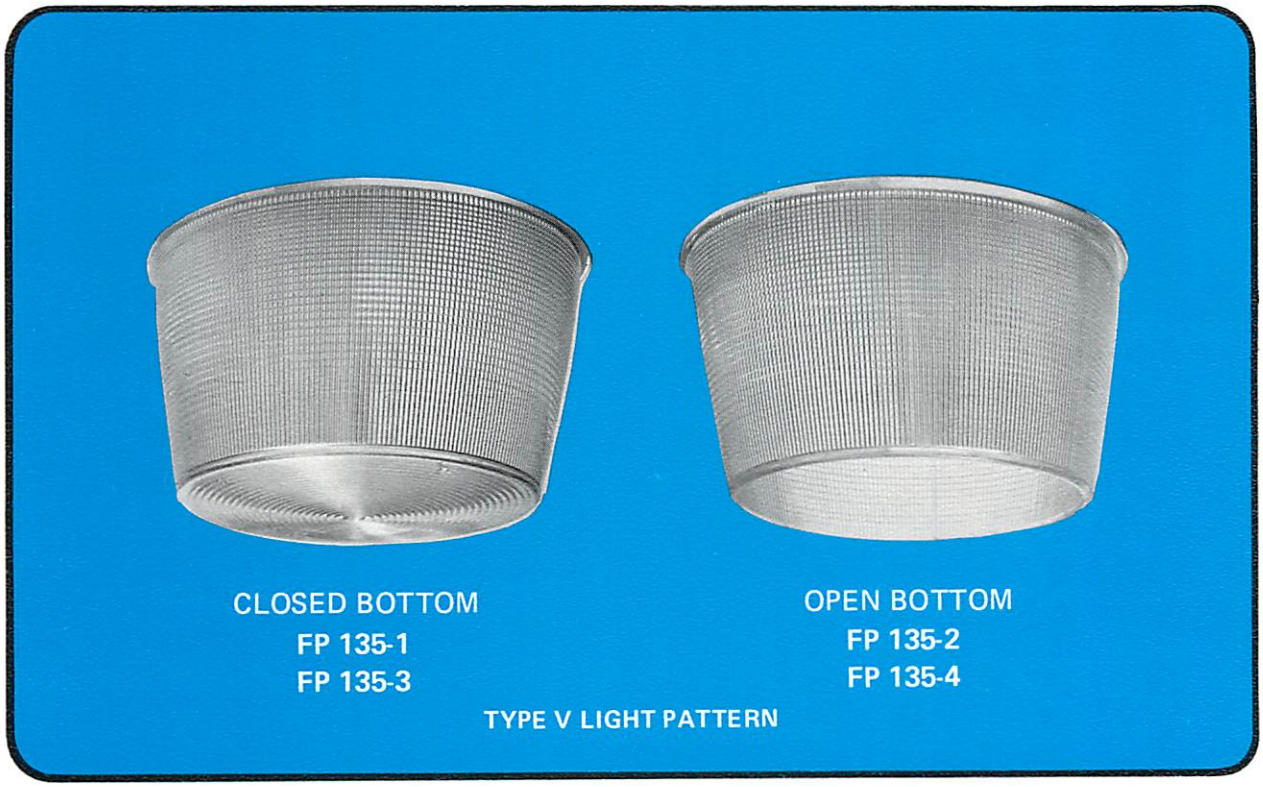

CLOSED BOTTOM
FP 135-1
FP 135-3

OPEN BOTTOM
FP 135-2
FP 135-4

TYPE V LIGHT PATTERN

FEATURES:

- ☐ High impact strength
- ☐ Shatter proof
- ☐ Glasslike appearance
- ☐ Lightweight (75% lighter than glass)
- ☐ Excellent light transmission
- ☐ Ultra-violet stabilized
- ☐ Reduces vandalism
- ☐ Eliminates hazards of broken glass

*LEXAN — GENERAL ELECTRIC CO.
MERLON — MOBAY CHEMICAL CO.

**PLEXIGLAS — ROHM & HAAS CO.
LUCITE — DUPONT

FORMED PLASTICS INC. 207 Stonehinge Lane • Carle Place, L.I., N.Y. 11514 • (516) 334-2300)

DIMENSIONS:

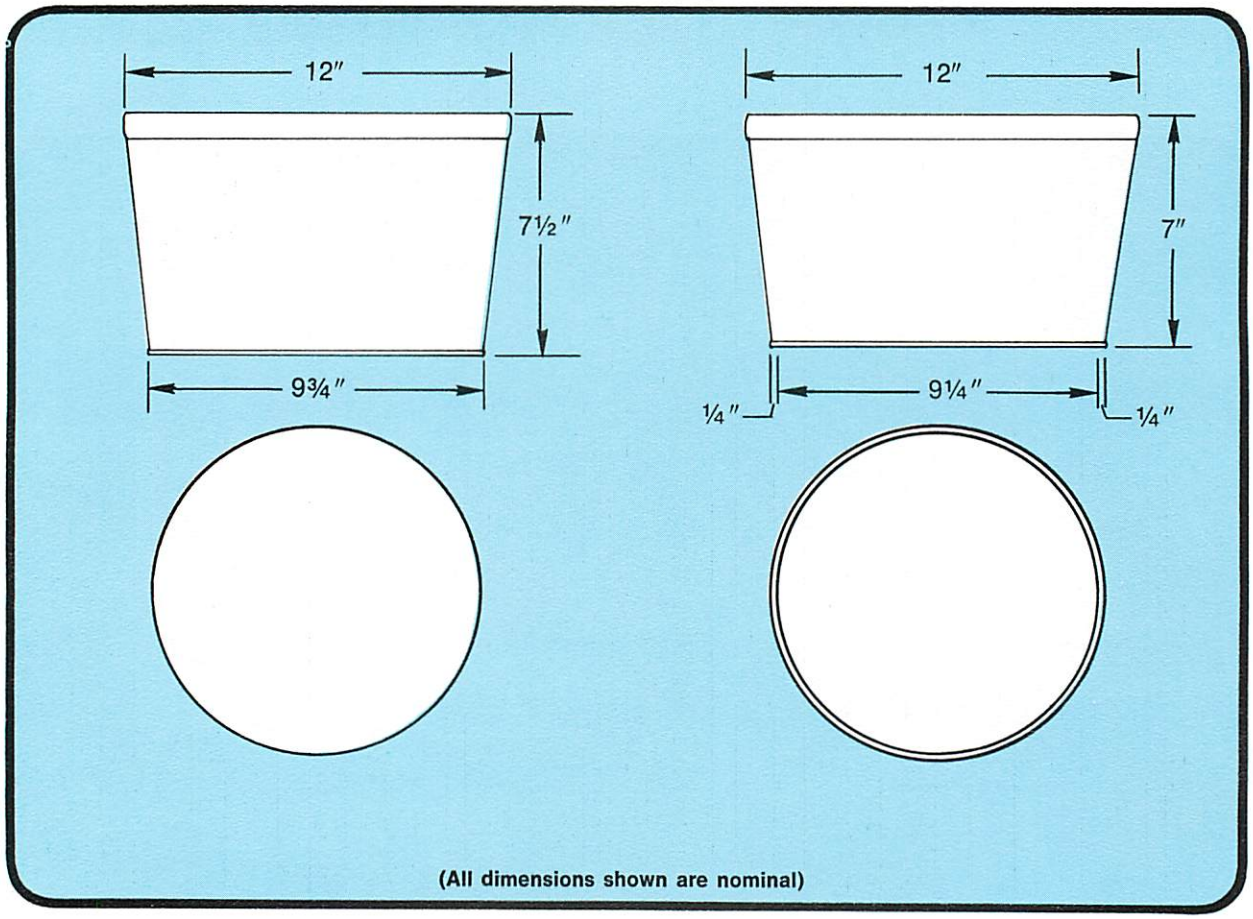

ORDERING DESCRIPTIONS:

FP 135-1 – POLYCARBONATE	CLOSED BOTTOM
FP 135-2 – POLYCARBONATE	OPEN BOTTOM
FP 135-3 – ACRYLIC	CLOSED BOTTOM
FP 135-4 – ACRYLIC	OPEN BOTTOM

TYPE V LIGHT PATTERN

FORMED PLASTICS INC.
207 STONEHINGE LANE
CARLE PLACE, L.I., N.Y. 11514
(516) 334-2300

REPRESENTED BY:

POLYCARBONATE* & ACRYLIC* *

STREET LIGHT GLOBES

PENDANT TYPE REFRACTORS

CLOSED BOTTOM
FP 129-1
FP 129-3

OPEN BOTTOM
FP 129-2
FP 129-4

FEATURES:

- ☐ High impact strength
- ☐ Shatter proof
- ☐ Glasslike appearance
- ☐ Lightweight (75% lighter than glass)
- ☐ Excellent light transmission
- ☐ Ultra-violet stabilized
- ☐ Reduces vandalism
- ☐ Eliminates hazards of broken glass

*LEXAN — GENERAL ELECTRIC CO.
MERLON — MOBAY CHEMICAL CO.

**PLEXIGLAS — ROHM & HAAS CO.
LUCITE — DUPONT

FORMED PLASTICS INC. 207 Stonehinge Lane • Carle Place, L.I., N.Y. 11514 • (516) 334-2300

DIMENSIONS:

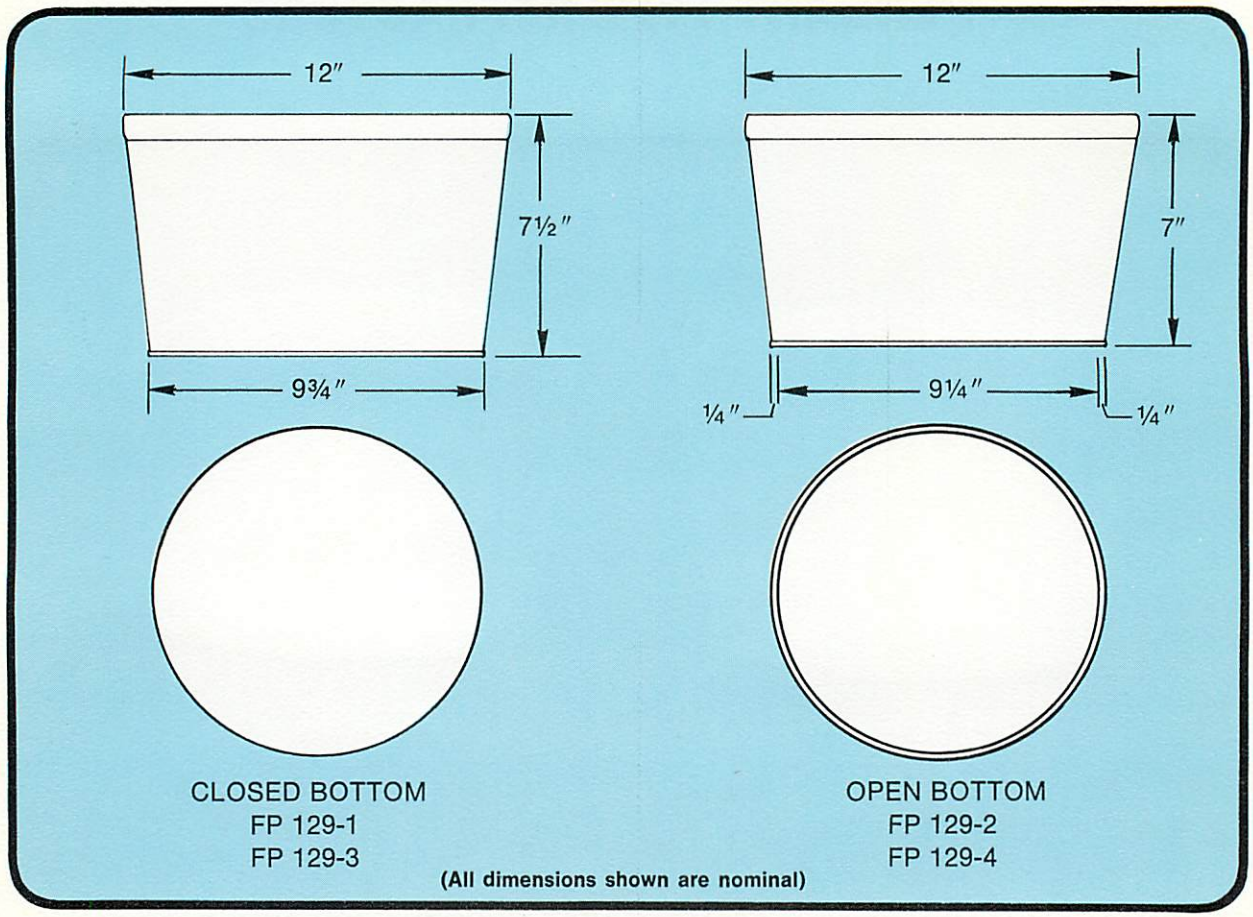

CLOSED BOTTOM
FP 129-1
FP 129-3

OPEN BOTTOM
FP 129-2
FP 129-4

(All dimensions shown are nominal)

ORDERING DESCRIPTIONS:

FP 129-1 — POLYCARBONATE	CLOSED BOTTOM
FP 129-2 — POLYCARBONATE	OPEN BOTTOM
FP 129-3 — ACRYLIC	CLOSED BOTTOM
FP 129-4 — ACRYLIC	OPEN BOTTOM

FORMED PLASTICS INC.
207 STONEHINGE LANE
CARLE PLACE, L.I., N.Y. 11514
(516) 334-2300

REPRESENTED BY:

POLYCARBONATE * & ACRYLIC * *

STREET LIGHT GLOBES

PENDANT TYPE REFRACTORS WITH REFLECTOR

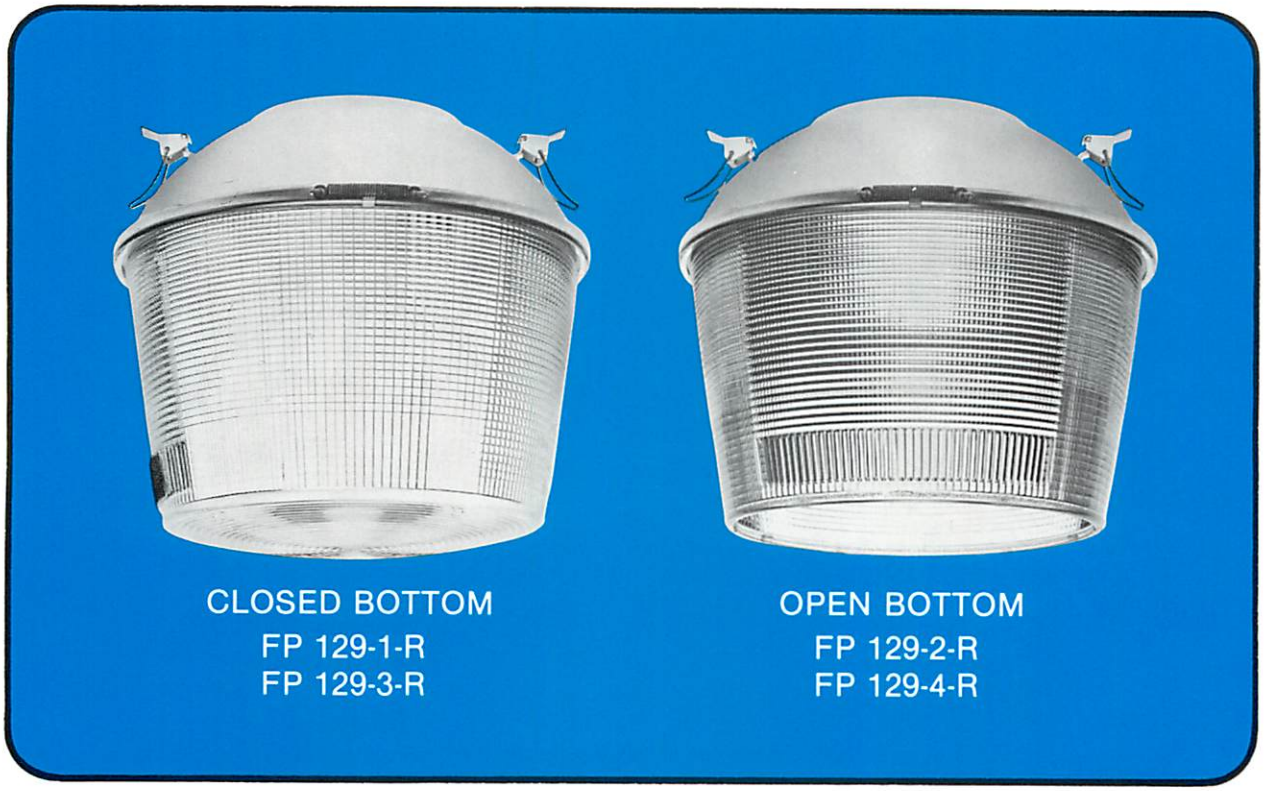

CLOSED BOTTOM
FP 129-1-R
FP 129-3-R

OPEN BOTTOM
FP 129-2-R
FP 129-4-R

FEATURES:

- ☐ High impact strength
- ☐ Shatter proof
- ☐ Glasslike appearance
- ☐ Lightweight (75% lighter than glass)
- ☐ Excellent light transmission
- ☐ Ultra-violet stabilized
- ☐ Reduces vandalism
- ☐ Eliminates hazards of broken glass

LEXAN — GENERAL ELECTRIC CO.
MERLON — MOBAY CHEMICAL CO.

**PLEXIGLAS — ROHM & HASS CO.
LUCITE — DUPONT

FORMED PLASTICS INC. 207 Stonehinge Lane • Carle Place, L.I., N.Y. 11514 • (516) 334-2300

DIMENSIONS:

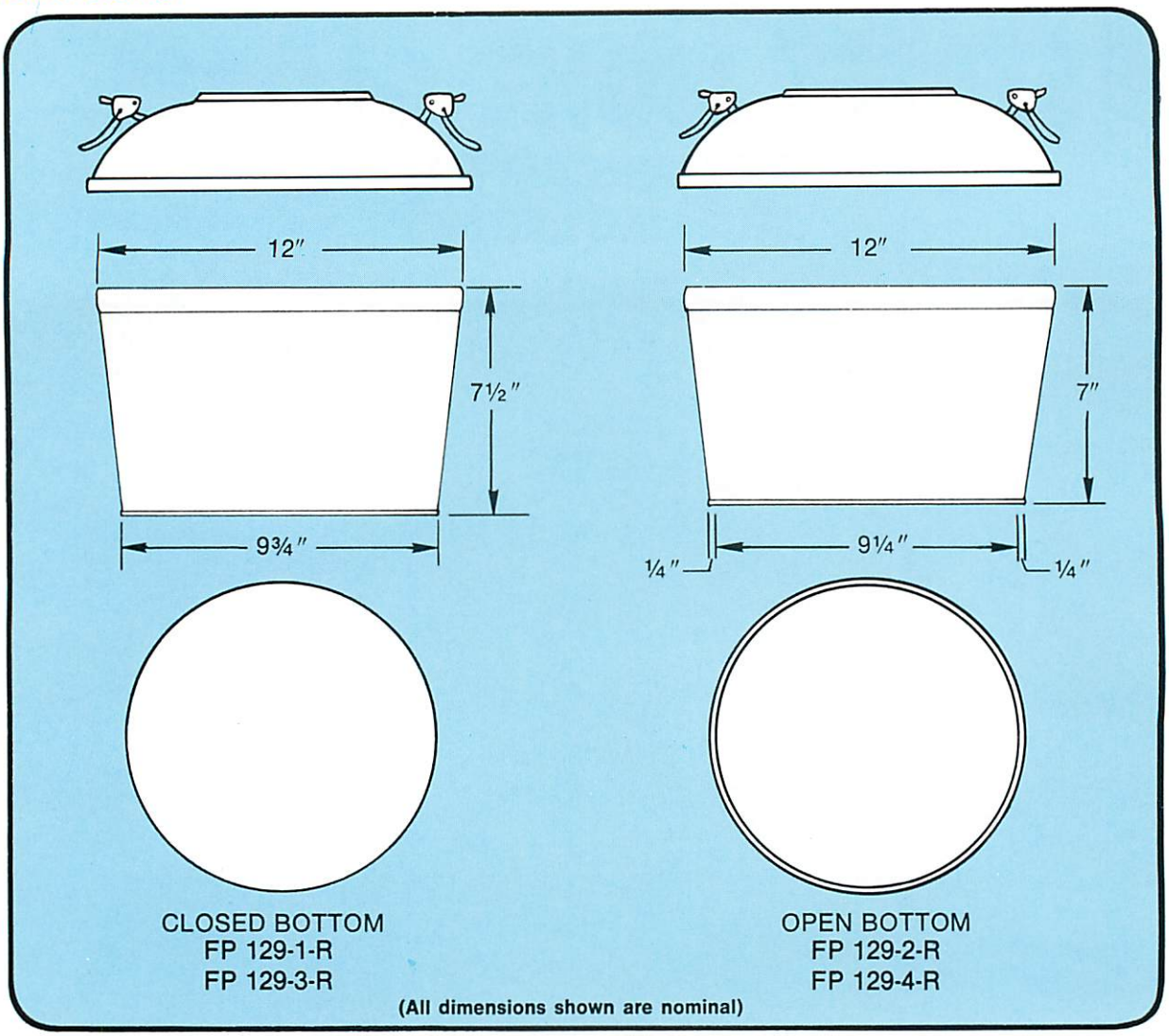

CLOSED BOTTOM
FP 129-1-R
FP 129-3-R

OPEN BOTTOM
FP 129-2-R
FP 129-4-R

(All dimensions shown are nominal)

ORDERING DESCRIPTIONS:

FP 129-1-R — POLYCARBONATE CLOSED BOTTOM
FP 129-2-R — POLYCARBONATE OPEN BOTTOM
FP 129-3-R — ACRYLIC CLOSED BOTTOM
FP 129-4-R — ACRYLIC OPEN BOTTOM

FORMED PLASTICS INC.
207 STONEHINGE LANE
CARLE PLACE, L.I., N.Y. 11514
(516) 334-2300

REPRESENTED BY:

POLYCARBONATE * & ACRYLIC * *

STREET LIGHT GLOBES

PENDANT TYPE REFRACTORS WITH REFLECTOR

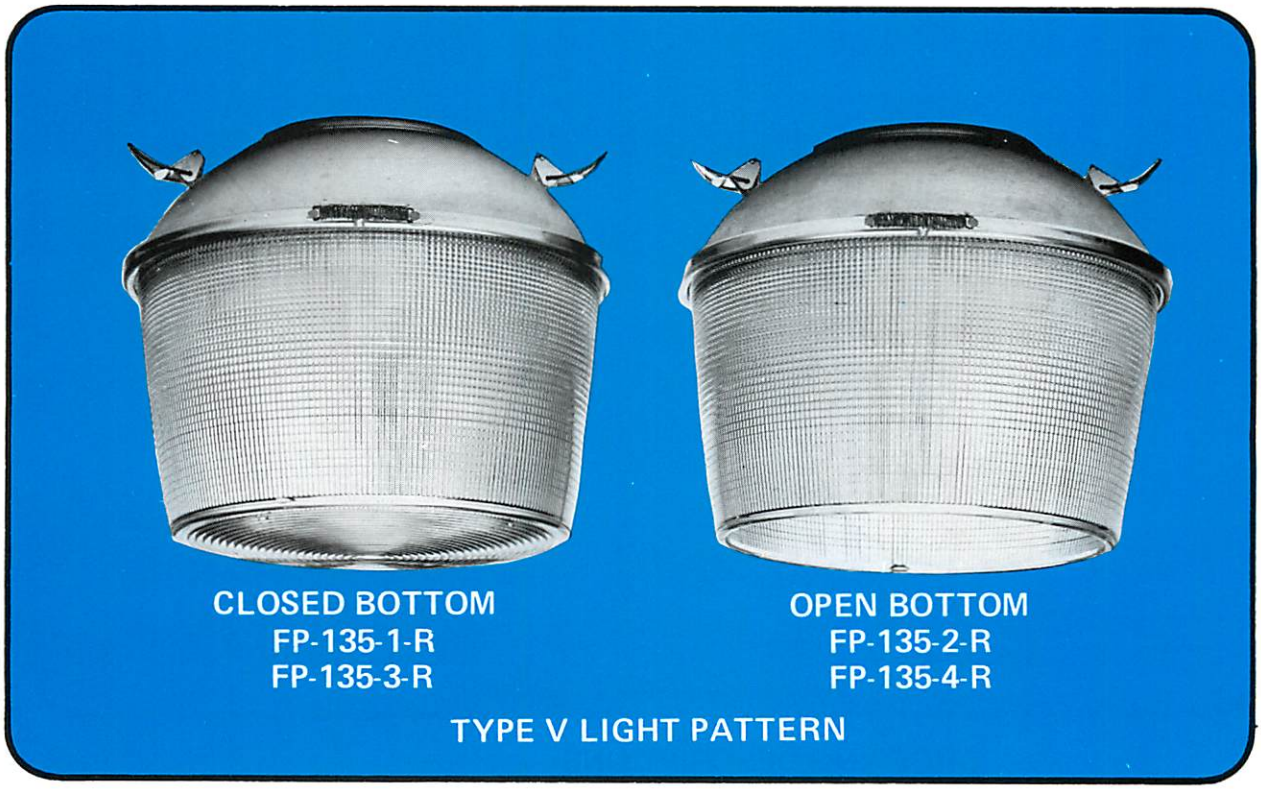

CLOSED BOTTOM
FP-135-1-R
FP-135-3-R

OPEN BOTTOM
FP-135-2-R
FP-135-4-R

TYPE V LIGHT PATTERN

FEATURES:

- ☐ High impact strength
- ☐ Shatter proof
- ☐ Glasslike appearance
- ☐ Lightweight (75% lighter than glass)
- ☐ Excellent light transmission
- ☐ Ultra-violet stabilized
- ☐ Reduces vandalism
- ☐ Eliminates hazards of broken glass

* LEXAN — GENERAL ELECTRIC CO.
MERLON — MOBAY CHEMICAL CO.

** PLEXIGLAS — ROHM & HASS CO.
LUCITE — DUPONT

FORMED PLASTICS INC. 207 Stonehinge Lane • Carle Place, L.I., N.Y. 11514 • (516) 334-2300

DIMENSIONS:

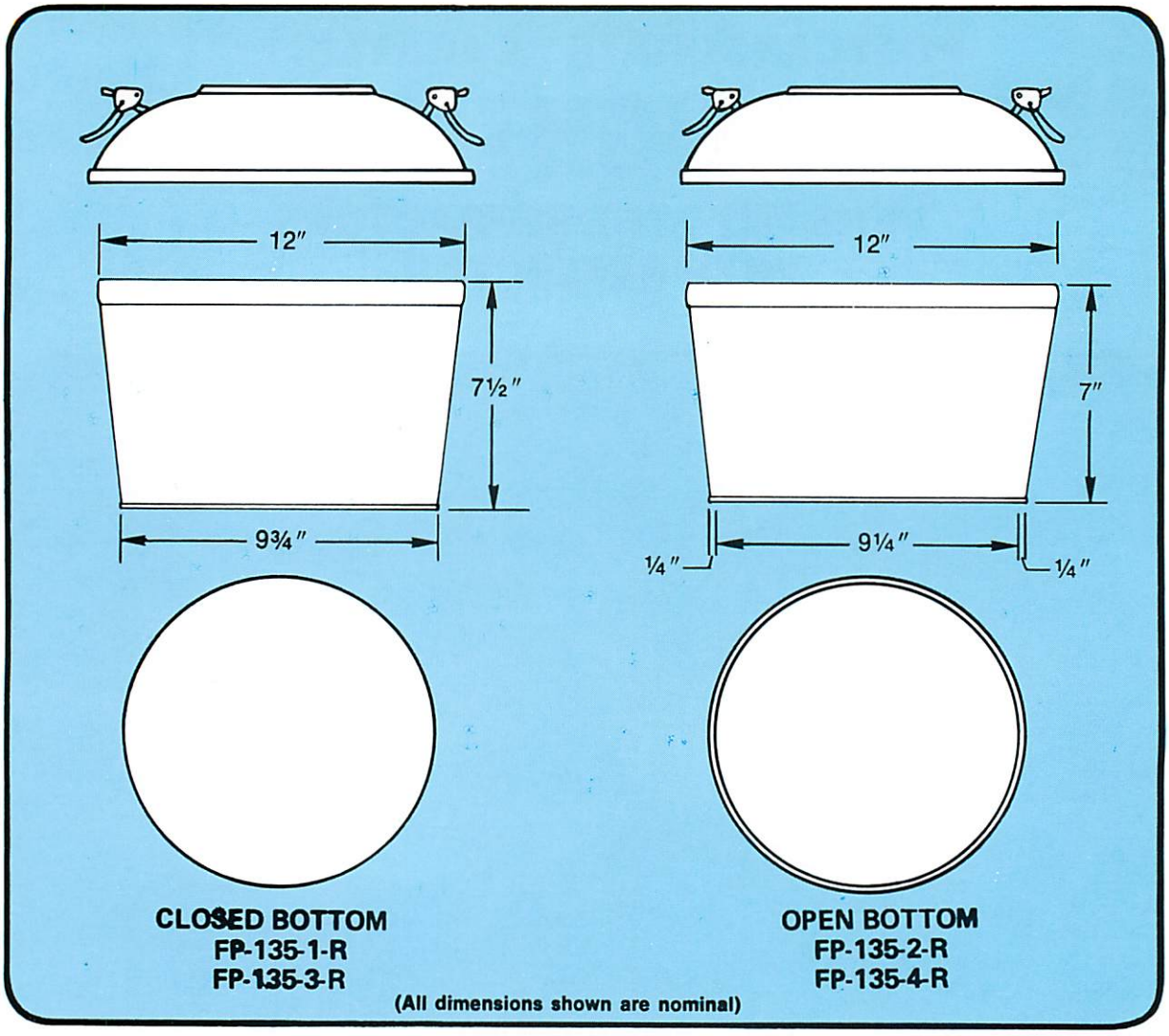

CLOSED BOTTOM
FP-135-1-R
FP-135-3-R

OPEN BOTTOM
FP-135-2-R
FP-135-4-R

(All dimensions shown are nominal)

ORDERING DESCRIPTIONS:

FP 135-1 – POLYCARBONATE	CLOSED BOTTOM
FP 135-2 – POLYCARBONATE	OPEN BOTTOM
FP 135-3 – ACRYLIC	CLOSED BOTTOM
FP 135-4 – ACRYLIC	OPEN BOTTOM

TYPE V LIGHT PATTERN

FORMED PLASTICS INC.
207 STONEHINGE LANE
CARLE PLACE, L.I., N.Y. 11514
(516) 334-2300

REPRESENTED BY:

POLYCARBONATE*

TUNNEL LIGHT GLOBES

PENDANT TYPE REFRACTORS

FP 612-1

Shown above with aluminum painted band.
Also available without painted band FP 612-2.

FEATURES:

- ☐ High impact strength
- ☐ Shatter proof
- ☐ Glasslike appearance
- ☐ Lightweight (75% lighter than glass)
- ☐ Excellent light transmission
- ☐ Ultra-violet stabilized
- ☐ Reduces vandalism
- ☐ Eliminates hazards of broken glass

*LEXAN — GENERAL ELECTRIC CO.
MERLON — MOBAY CHEMICAL CO.

FORMED PLASTICS INC. 207 Stonehinge Lane • Carle Place, L.I. N.Y. 11514 • (516) 334-2300

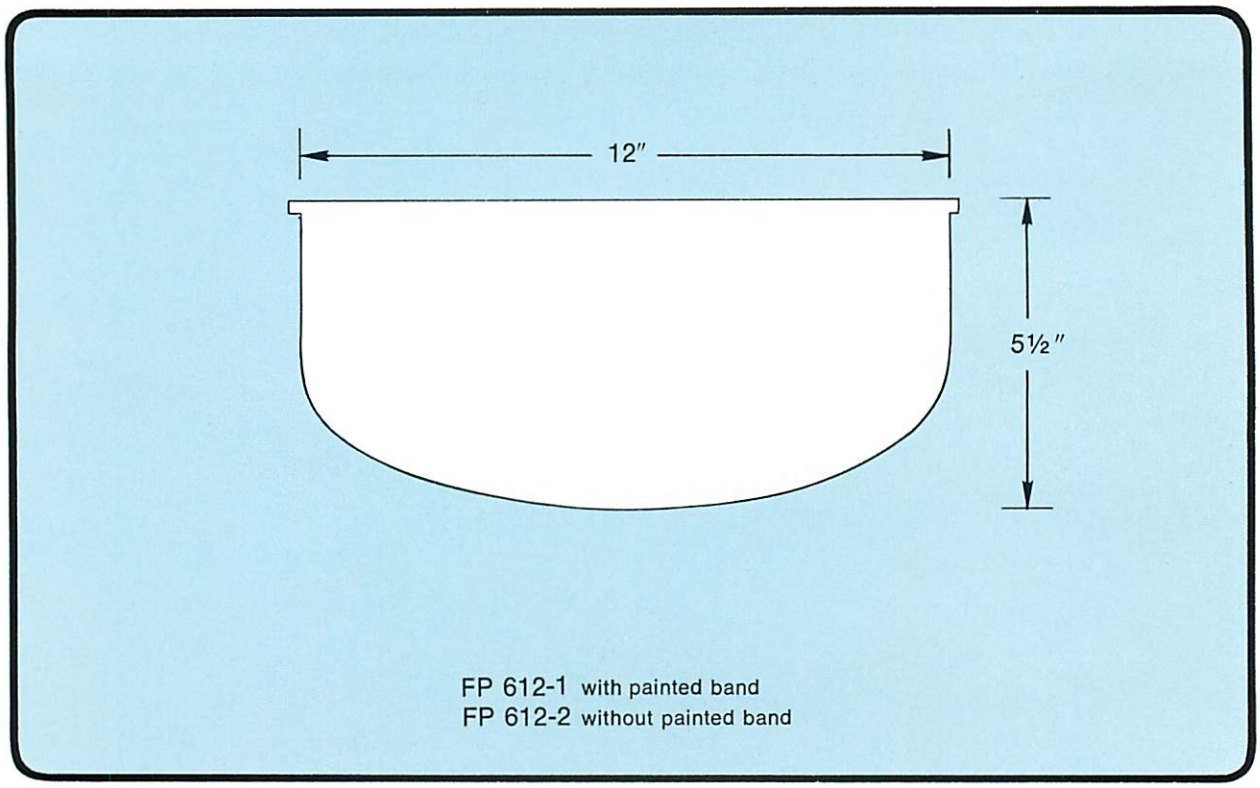

FP 612-1 with painted band
FP 612-2 without painted band

(All dimensions shown are nominal)

FORMED PLASTICS INC.
207 STONEHINGE LANE
CARLE PLACE, L.I., N.Y. 11514
(516) 334-2300

REPRESENTED BY:

POLYCARBONATE*

STREET LIGHT GLOBES

PENDANT TYPE REFRACTORS

FEATURES:

- ☐ High impact strength
- ☐ Shatter proof
- ☐ Glasslike appearance
- ☐ Lightweight (75% lighter than glass)
- ☐ Excellent light transmission
- ☐ Ultra-violet stabilized
- ☐ Reduces vandalism
- ☐ Eliminates hazards of broken glass

*LEXAN— GENERAL ELECTRIC CO.
MERLON– MOBAY CHEMICAL CO.

FORMED PLASTICS INC. 207 Stonehinge Lane • Carle Place, L.I., N.Y. 11514 • (516) 334-2300

DIMENSIONS:

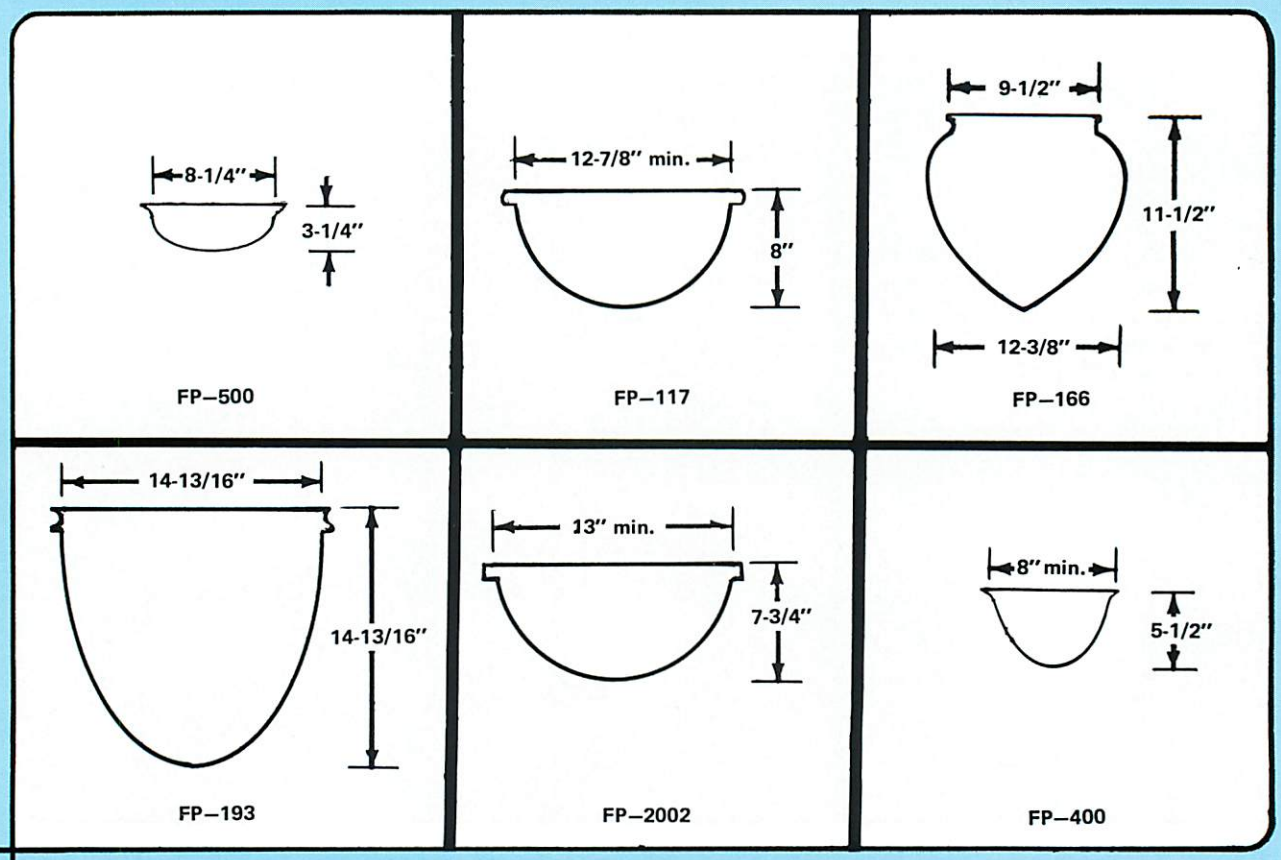

(All dimensions shown are nominal)

FORMED PLASTICS INC.
207 STONEHINGE LANE
CARLE PLACE, L.I., N.Y. 11514
(516) 334-2300

REPRESENTED BY:

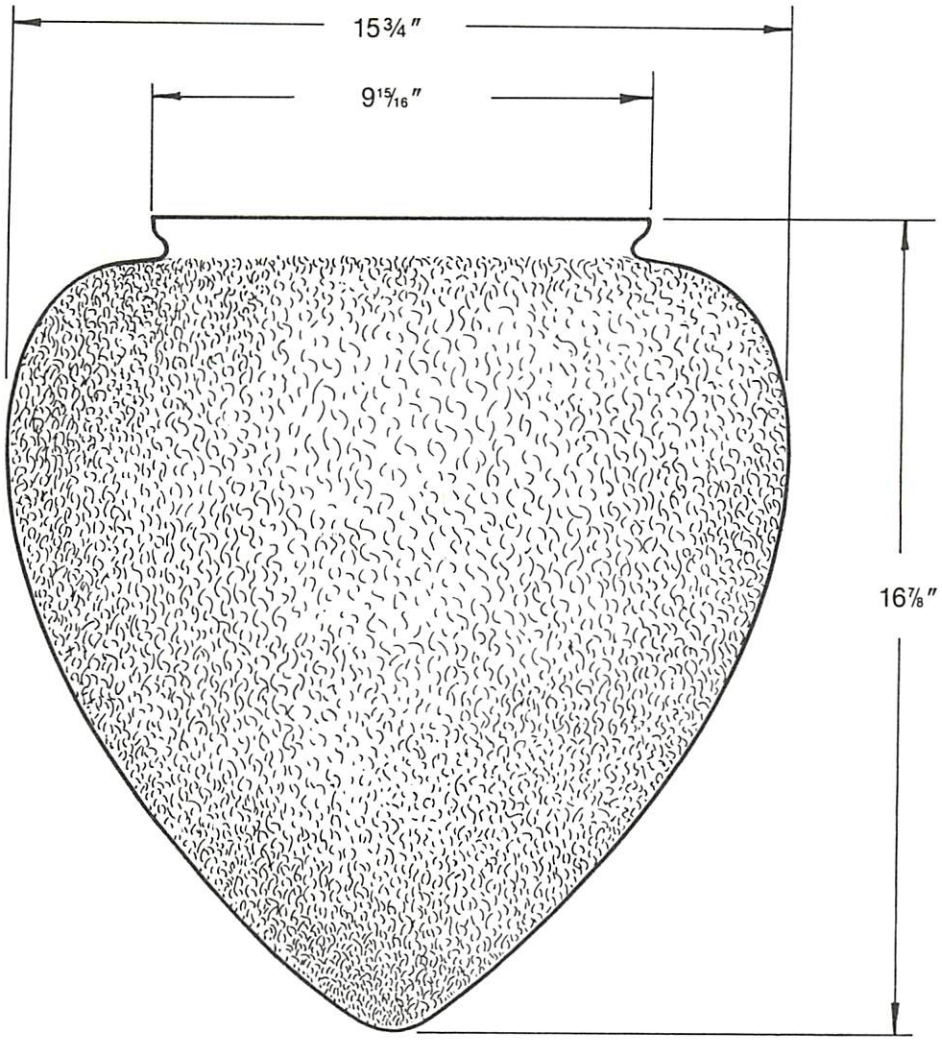

FP 146

POLYCARBONATE PENDANT TYPE GLOBE

VANDAL RESISTANT POLYCARBONATE PENDANT TYPE GLOBE	**FORMED PLASTICS INC.** 207 STONEHINGE LANE CARLE PLACE, L.I., N.Y. 11514 516/334-2300	Date	11/20/79
		Part No.	FP 146

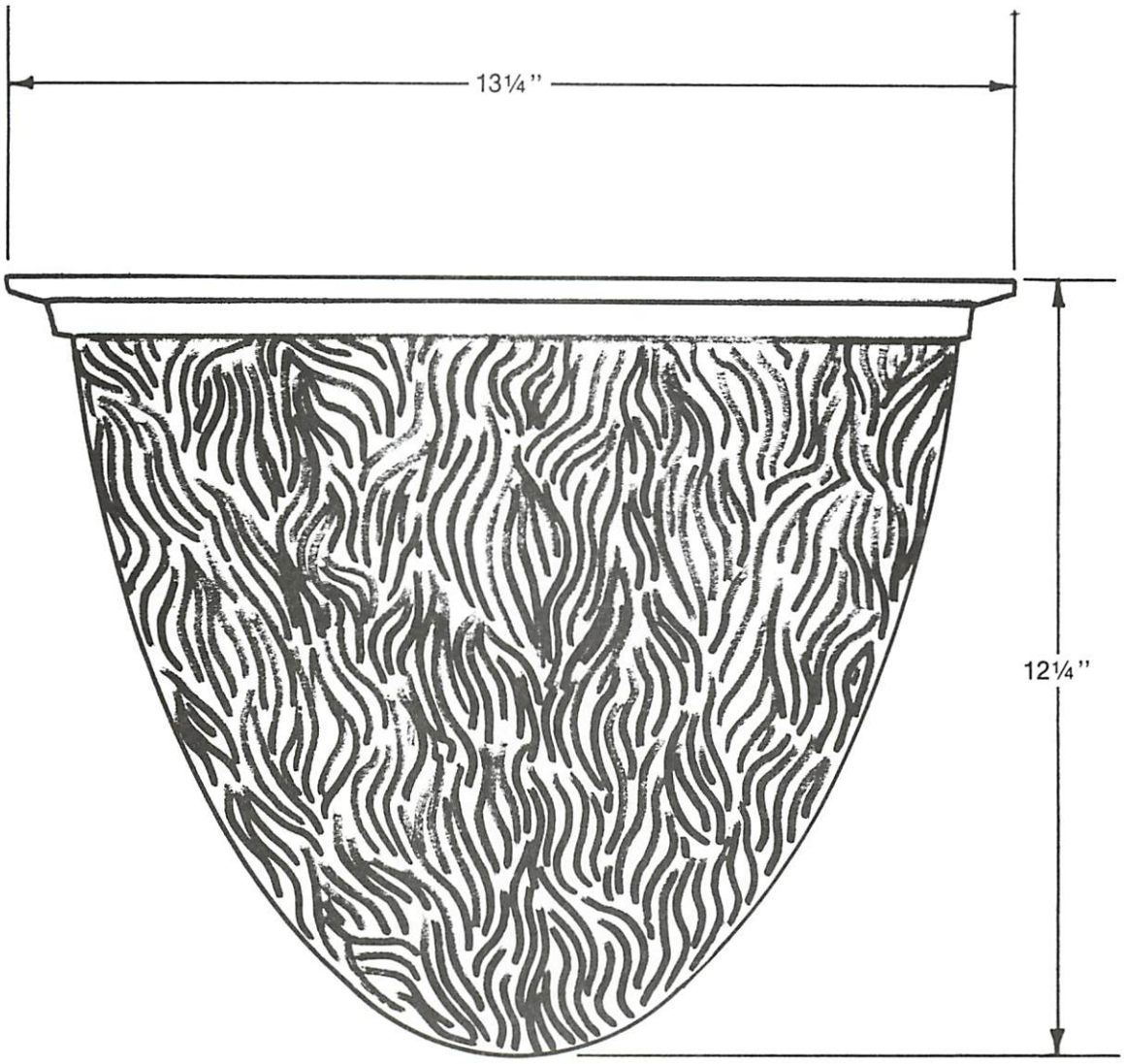

FP 8039

POLYCARBONATE PENDANT TYPE GLOBE

VANDAL RESISTANT POLYCARBONATE PENDANT TYPE GLOBE	**FORMED PLASTICS INC.** 207 STONEHINGE LANE CARLE PLACE, L.I., N.Y. 11514 516/334-2300	Date	6/12/84
		Part No.	FP 8039

FORMED PLASTICS INC.
207 STONEHINGE LANE, CARLE PLACE, NEW YORK / 11514-1743
516 334-2300 • FAX 516 334-2679 • www.formedplastics.com

SUGGESTED MAXIMUM WATTAGES-PENDANT REFRACTORS

MODEL	HIGH PRESSURE SODIUM OR MERCURY VAPOR	INCANDESCENT
FP-004	400 WATTS	-
FP-117	400 "	585 WATTS
FP-129-1	250 "	-
FP-129-2	250	-
FP-129-3	175 "	-
FP-129-4	250 "	-
FP-166	400 "	300 WATTS
FP-193	400 "	585 "
FP-400	-	175 "
FP-425	400 WATTS	-
FP-450	400 "	-
FP-500	-	150 WATTS
FP-516	250 WATTS	-
FP-612	250 "	-
FP-2002	400 "	585 WATTS

NOTES

1. This wattage chart is for use as a general chart only. No warranty or guarantee is expressed or implied as only the user can determine the stability of a product for this purpose.
2. Actual wattage ratings are influenced by many factors including Fixture, Type, Bulb Location and Ambient Temperature.
3. The center of the light source should be located at the center of the sphere.

CROSS REFERENCE CHART

PENDANT TYPE REFRACTORS

FP	G.E.	WESTINGHOUSE	McGRAW	MISCELLANEOUS
004	509 510 35-231137-01 35-130015-02			
117	205 207 241 35-120635-01		L029XL	J-904030 Lexalite 100 A. E. 100U
129-1	545 35-221144-05			AE-240 Pemco 4009 P/CB H-4821-CPB
129-1-R	C601GXXX C615GXXX			
129-2	539 35-120383-15			AE-245 Pemco 4009P
129-2-R	C601GXXX			
129-3	550 35-221144-15			AE-250 Pemco 4009A/CB
129-3-R	C601GXXX C615GXXX			
129-4	520 35-120383-05	890D055G05 5122D67G03		LM-LO211X1 AE-255 Pemco 4008 AE-P11701 H-4713
129-4-R	C601G013A	106D234G10		Pemco 10345 AE-S-110368

FORMED PLASTICS INC.
207 STONEHINGE LANE
CARLE PLACE, L.I., N.Y. 11514
(516) 334-2300

CROSS REFERENCE CHART

PENDANT TYPE REFRACTORS

F.P.	G.E.	WESTINGHOUSE	McGRAW	MISCELLANEOUS
166	166	341029	H-58 (M)	J-904044 Gill G-30 Perma 8-117
193	193			J-904087 Raylite 110
400		AK-6		J-904088
420		OV-20		H-4003
425-W		OV-25 464D336-H01		
450-MAP			LO330X1 LO14X1	A.E.25-003-8 PEMCO EHM-400 J-904015 A.E. 25-003
500			LO-11X1	
516	516 530 560 35-130583-01 35-130707-01 35-130707-03	OV-15 106D145-H02 106D613-H02 106D613-H01	LO-219X1 LO-320X2 LO-320X1	A.E.13-002 A.E.23-002-8 A.E.23-002-6 Lexalite 300 PEMCO EHM-175
517 (516 Modified)		OV-10 OV-12		
2002	241A 35-121094-01			J-904025

FORMED PLASTICS INC.
207 STONEHINGE LANE
CARLE PLACE, L.I., N.Y. 11514
(516) 334-2300

POLYCARBONATE
STREET LIGHT GLOBES
ROTATIONALLY MOLDED
ONE PIECE CONSTRUCTION

FP-107

FP-109

FEATURES:

- ☐ High impact strength
- ☐ Shatterproof
- ☐ Glasslike appearance
- ☐ Lightweight (75% lighter than glass)
- ☐ Excellent light transmission
- ☐ Ultra-violet stabilized
- ☐ Reduces vandalism
- ☐ Eliminates hazards of broken glass

FORMED PLASTICS INC. 207 Stonehinge Lane • Carle Place, L.I., N.Y. 11514 • (516) 334-2300 • FAX (516) 334-2679
www.formedplastics.com • e-mail: inquiries@formedplastics.com

DIMENSIONS:

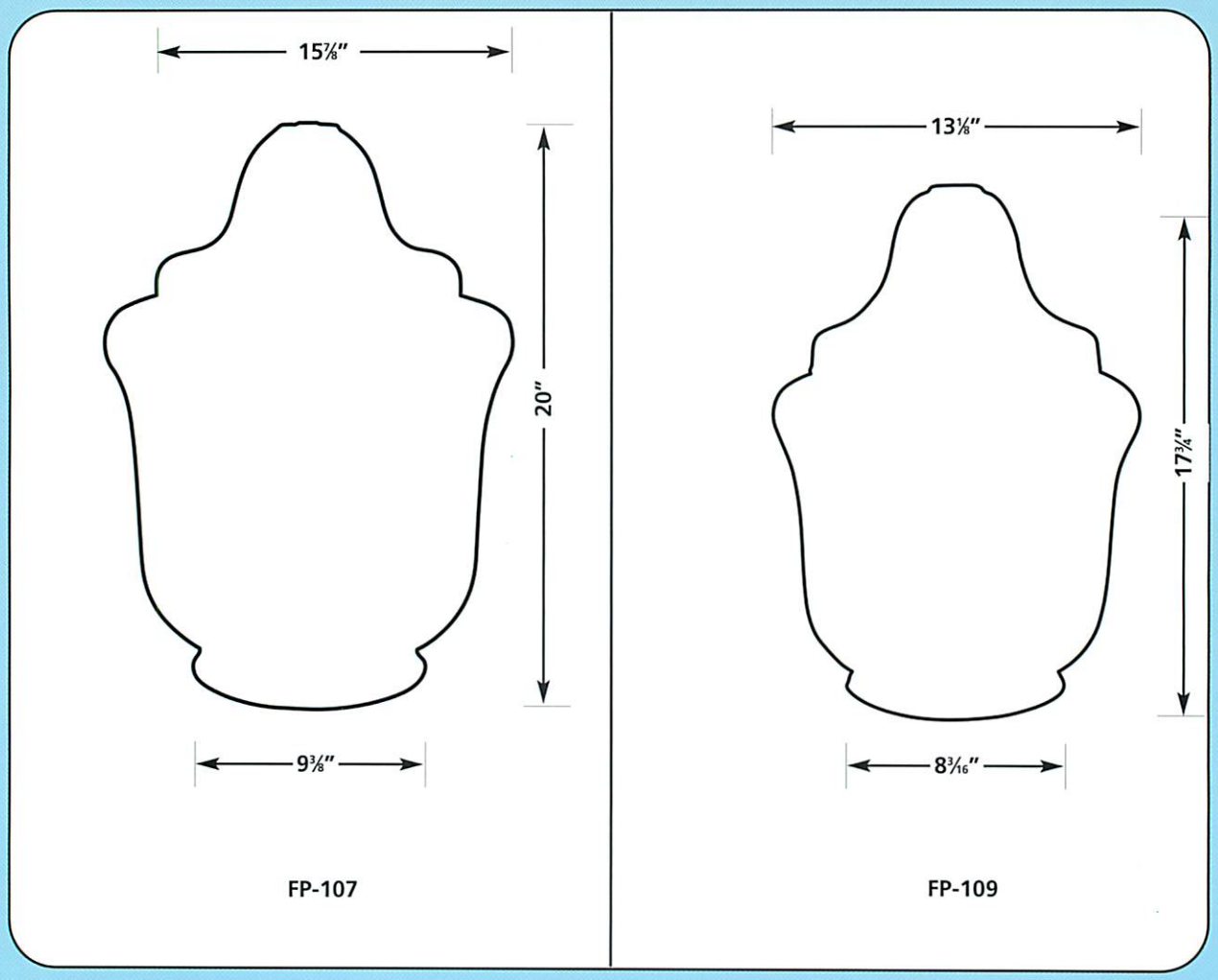

(All dimensions shown are nominal)

FORMED PLASTICS INC.
207 STONEHINGE LANE
CARLE PLACE, NY 11514
(516) 334-2300
www.formedplastics.com
e-mail: inquiries@formedplastics.com

REPRESENTED BY:

POLYCARBONATE*

STREET LIGHT GLOBES

ROTATIONALLY MOLDED
ONE PIECE CONSTRUCTION

FEATURES:

- ☐ High impact strength
- ☐ Shatter proof
- ☐ Glasslike appearance
- ☐ Lightweight (75% lighter than glass)
- ☐ Excellent light transmission
- ☐ Ultra-violet stabilized
- ☐ Reduces vandalism
- ☐ Eliminates hazards of broken glass

*LEXAN— GENERAL ELECTRIC CO.
MERLON– MOBAY CHEMICAL CO.

FORMED PLASTICS INC. 207 Stonehinge Lane • Carle Place, L.I., N.Y. 11514 • (516) 334-2300

DIMENSIONS:

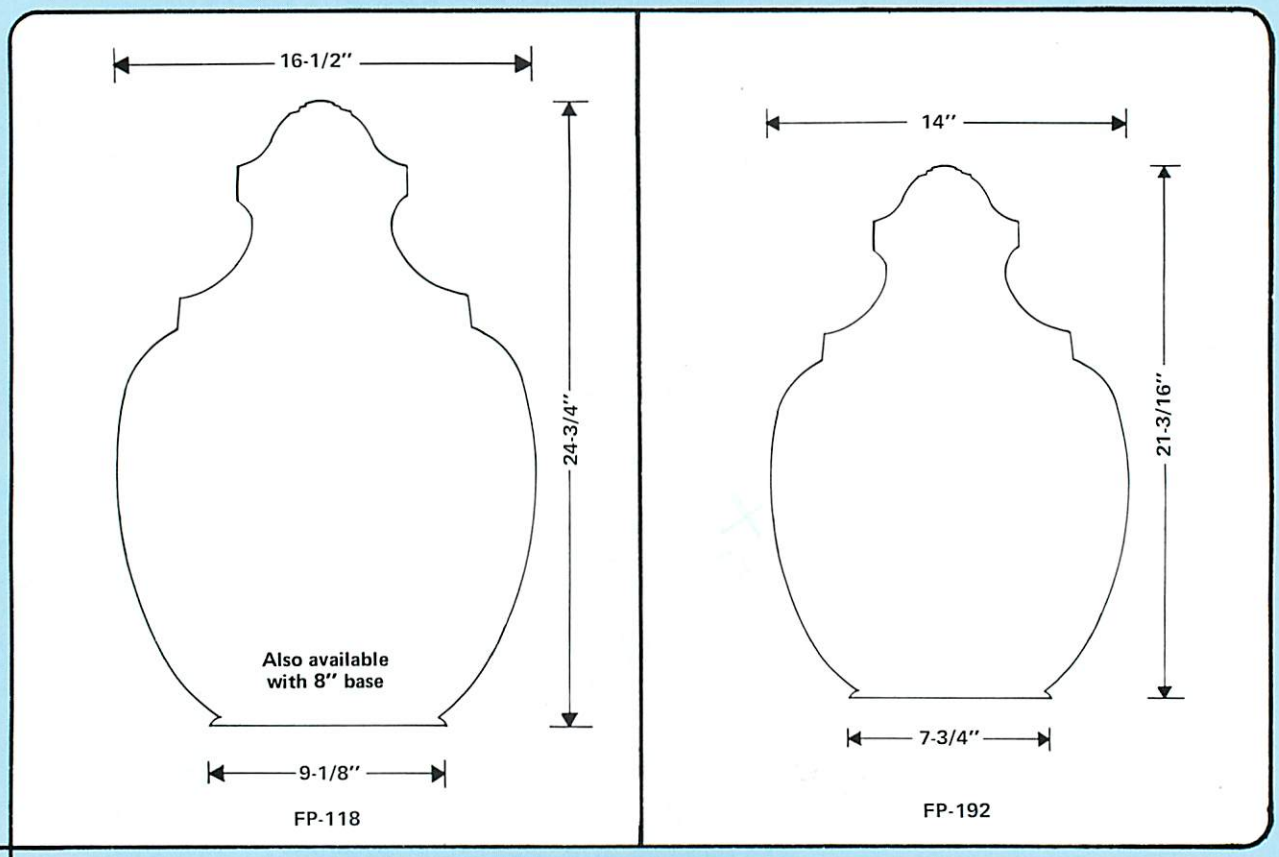

(All dimensions shown are nominal)

FORMED PLASTICS INC.
207 STONEHINGE LANE
CARLE PLACE, L.I., N.Y. 11514
(516) 334-2300

REPRESENTED BY:

POLYCARBONATE*
STREET LIGHT GLOBE
PRISMATIC TYPE II/III AND V

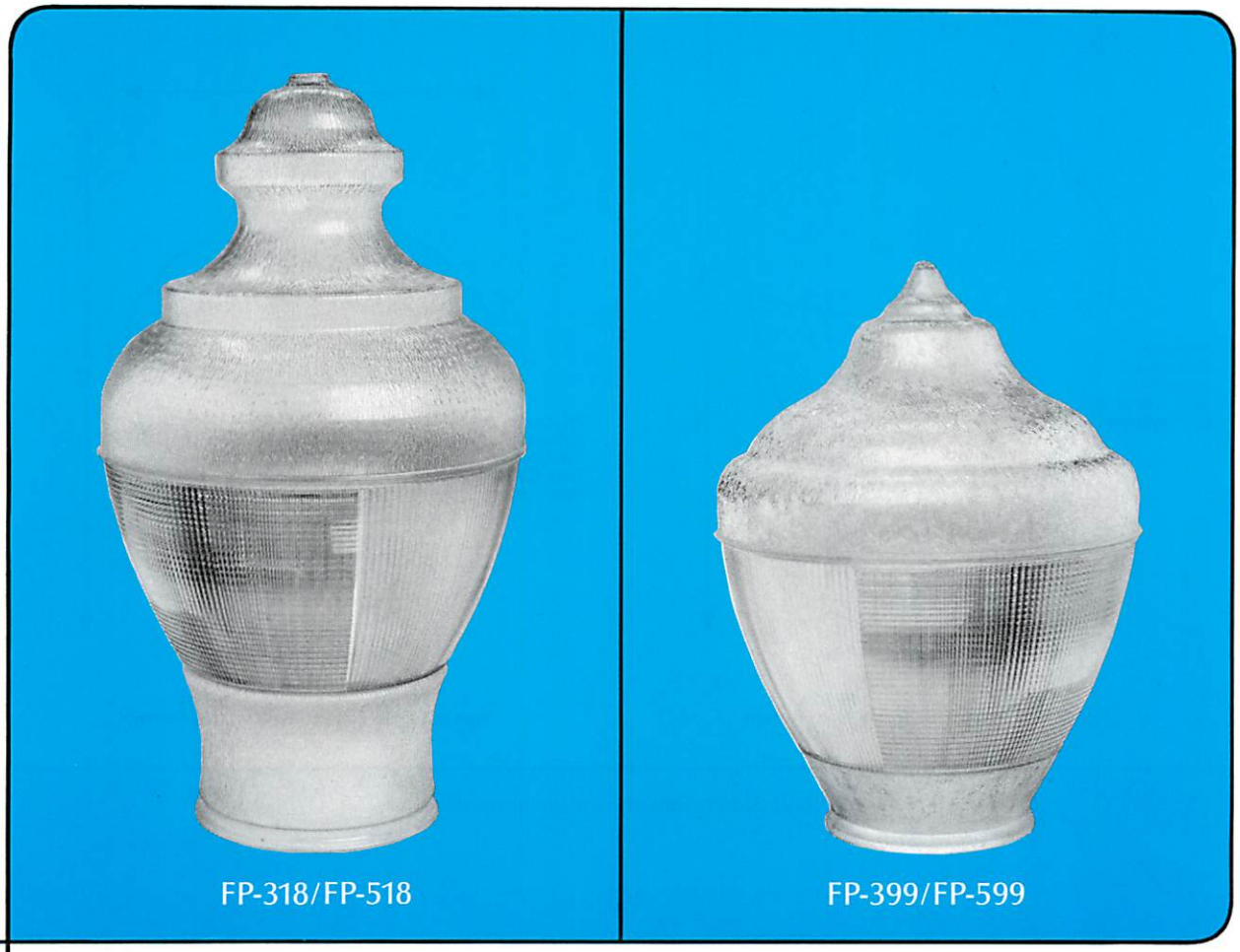

FP-318/FP-518

FP-399/FP-599

FEATURES:

- ☐ Allows Type II/III or V light distribution
- ☐ High impact strength
- ☐ Shatter proof
- ☐ Glasslike appearance
- ☐ Lightweight (75% lighter than glass)
- ☐ Excellent light transmission
- ☐ Ultra-violet stabilized
- ☐ Reduces vandalism
- ☐ Eliminates hazards of broken glass

*LEXAN—GENERAL ELECTRIC CO.
MAKROLON—MOBAY CHEMICAL CO.

FORMED PLASTICS INC. 207 Stonehinge Lane • Carle Place, L.I., N.Y. 11514 • (516) 334-2300 • FAX: (516) 334-2679

DIMENSIONS:

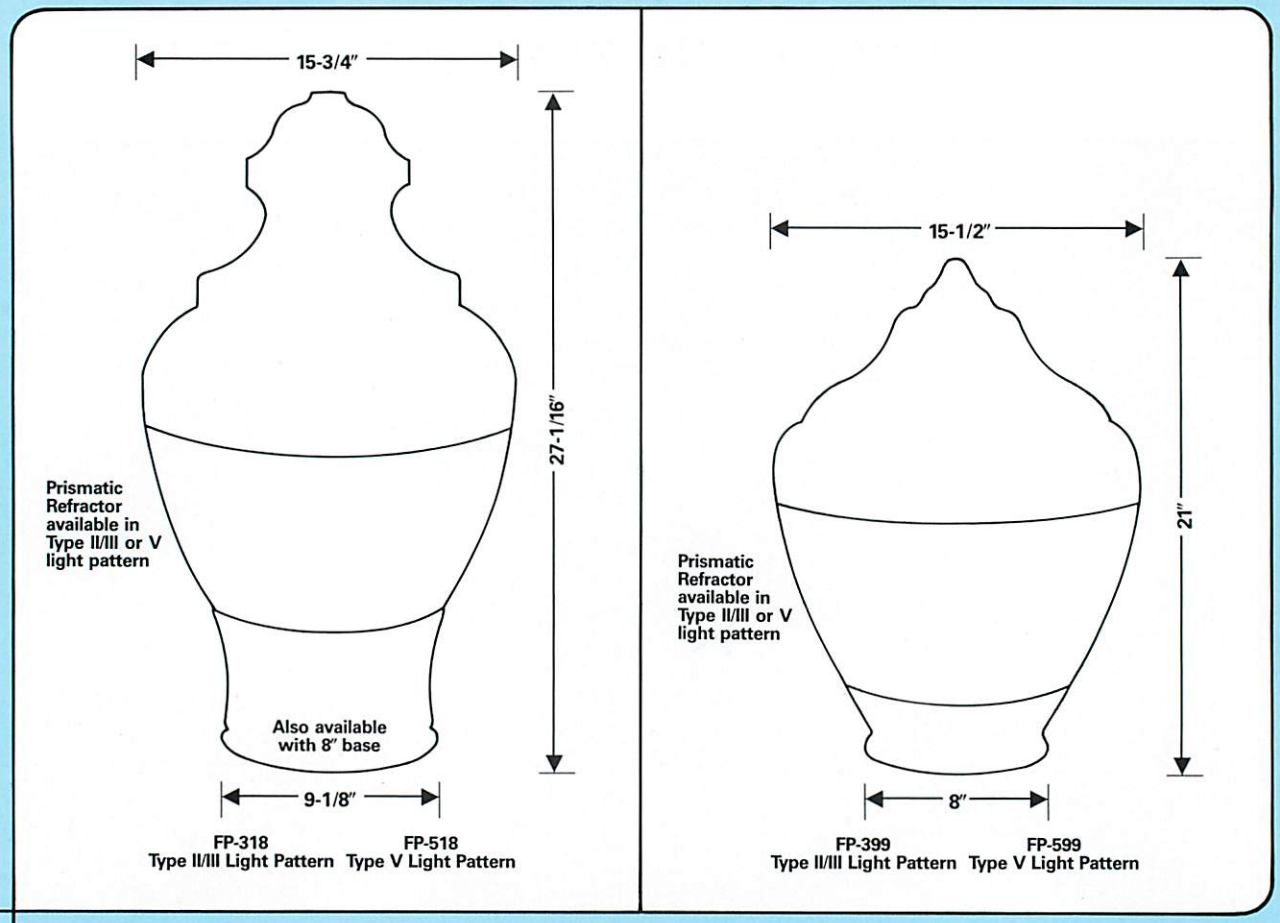

(All dimensions shown are nominal)

FORMED PLASTICS INC.

207 STONEHINGE LANE
CARLE PLACE, L.I., N.Y. 11514
(516) 334-2300

REPRESENTED BY:

2-PIECE PRISMATIC

POST TOP GLOBE

TYPE II/III AND V

FP-4318/FP-4518

FP-4399/FP-4599

FEATURES:

- ☐ Allows Type II/III or V light distribution
- ☐ High impact strength
- ☐ Shatter proof
- ☐ Glasslike appearance
- ☐ Lightweight (75% lighter than glass)
- ☐ Excellent light transmission
- ☐ Ultra-violet stabilized
- ☐ Reduces vandalism
- ☐ Eliminates hazards of broken glass

FORMED PLASTICS INC. 207 Stonehinge Lane • Carle Place, L.I., N.Y. 11514 • (516) 334-2300 • FAX: (516) 334-2679

DIMENSIONS:

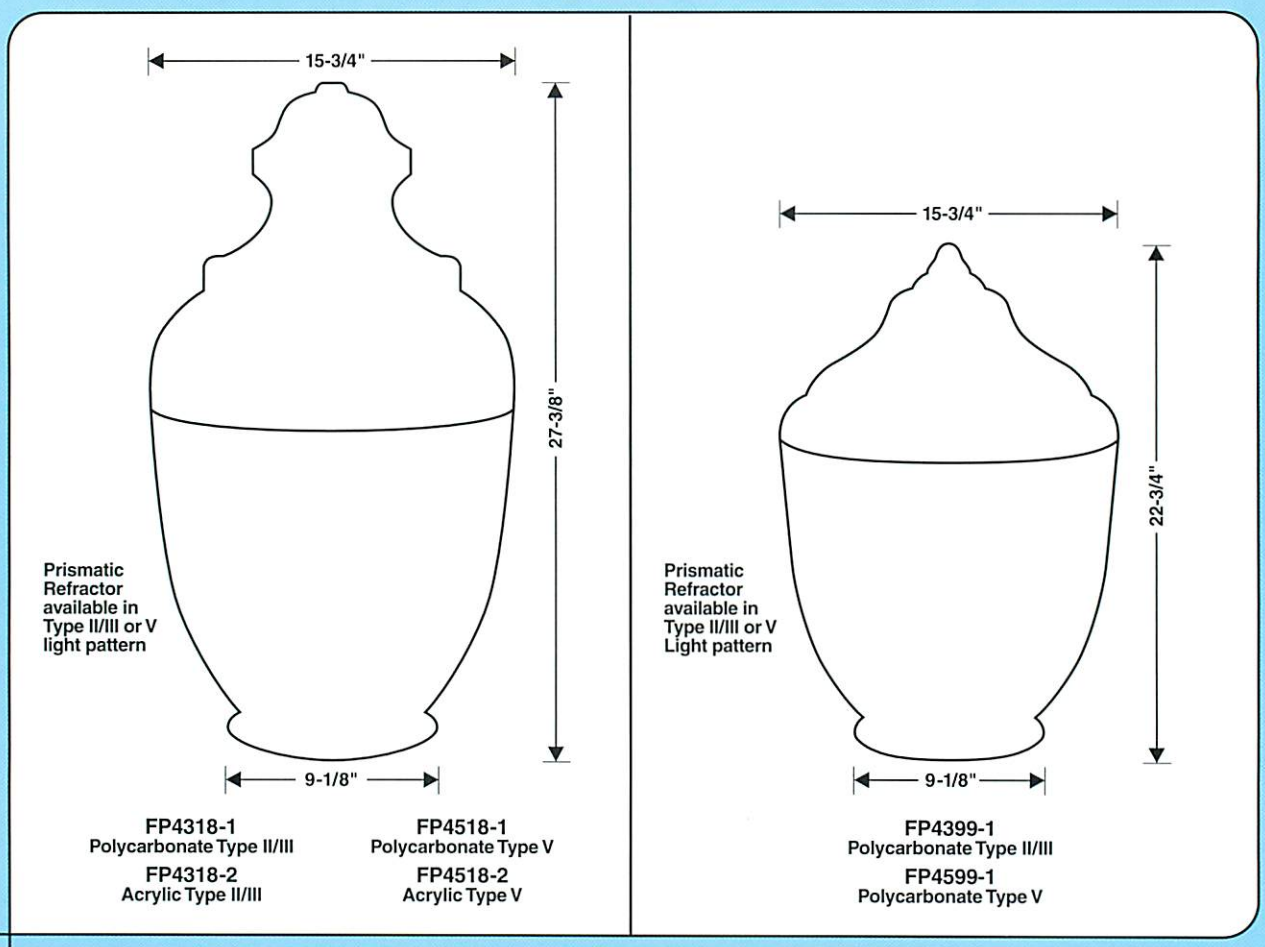

FP4318-1
Polycarbonate Type II/III

FP4318-2
Acrylic Type II/III

FP4518-1
Polycarbonate Type V

FP4518-2
Acrylic Type V

FP4399-1
Polycarbonate Type II/III

FP4599-1
Polycarbonate Type V

(All dimensions shown are nominal)

9-1/8" neck can be converted for use with an 8" post top by using Formed Plastics FP3715-4 reduction adapter (see catalog page A3)

FORMED PLASTICS INC.
207 STONEHINGE LANE
CARLE PLACE, L.I., N.Y. 11514
(516) 334-2300

REPRESENTED BY:

POLYCARBONATE* STREET LIGHT GLOBE

BLOW MOLDED ONE PIECE CONSTRUCTION

FP-108

FEATURES:

- ☐ High impact strength
- ☐ Shatter proof
- ☐ Glasslike appearance
- ☐ Lightweight (75% lighter than glass)
- ☐ Excellent light transmission
- ☐ Ultra-violet stabilized
- ☐ Reduces vandalism
- ☐ Eliminates hazards of broken glass

*LEXAN—GENERAL ELECTRIC CO.
MAKROLON—MOBAY CHEMICAL CO.

FORMED PLASTICS INC. 207 Stonehinge Lane • Carle Place, L.I., N.Y. 11514 • (516) 334-2300 • FAX: (516) 334-2679

DIMENSIONS:

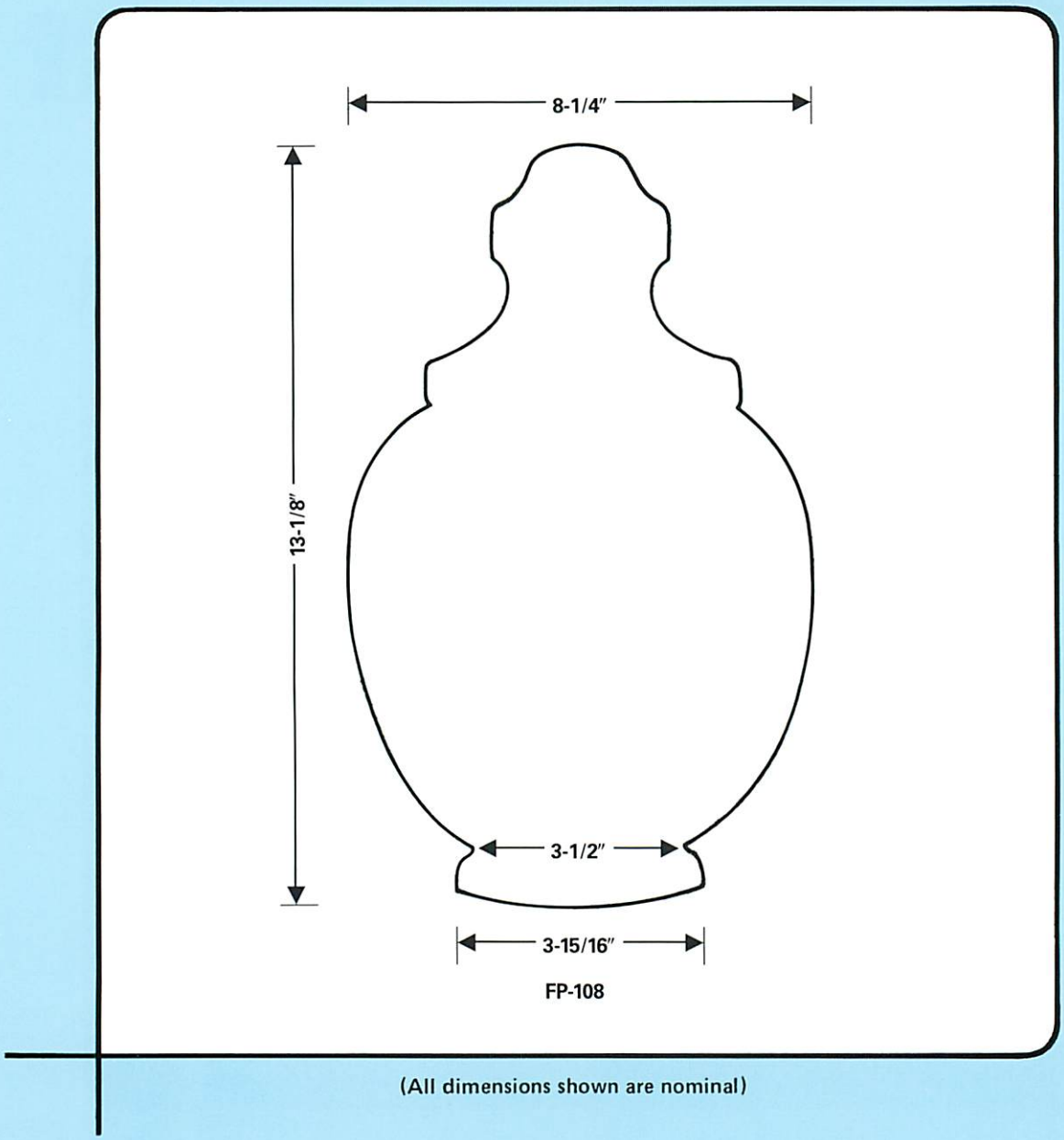

FP-108

(All dimensions shown are nominal)

FORMED PLASTICS INC.
207 STONEHINGE LANE
CARLE PLACE, L.I., N.Y. 11514
(516) 334-2300

REPRESENTED BY:

POLYCARBONATE*
STREET LIGHT GLOBES
ROTATIONALLY MOLDED
ONE PIECE CONSTRUCTION

FP—199

FP—197

FEATURES:

- ☐ High impact strength
- ☐ Shatter proof
- ☐ Glasslike appearance
- ☐ Lightweight (75% lighter than glass)
- ☐ Excellent light transmission
- ☐ Ultra-violet stabilized
- ☐ Reduces vandalism
- ☐ Eliminates hazards of broken glass

*LEXAN— GENERAL ELECTRIC CO.
MERLON— MOBAY CHEMICAL CO.

FORMED PLASTICS INC. 207 Stonehinge Lane • Carle Place, L.I., N.Y. 11514 • (516) 334-2300

DIMENSIONS:

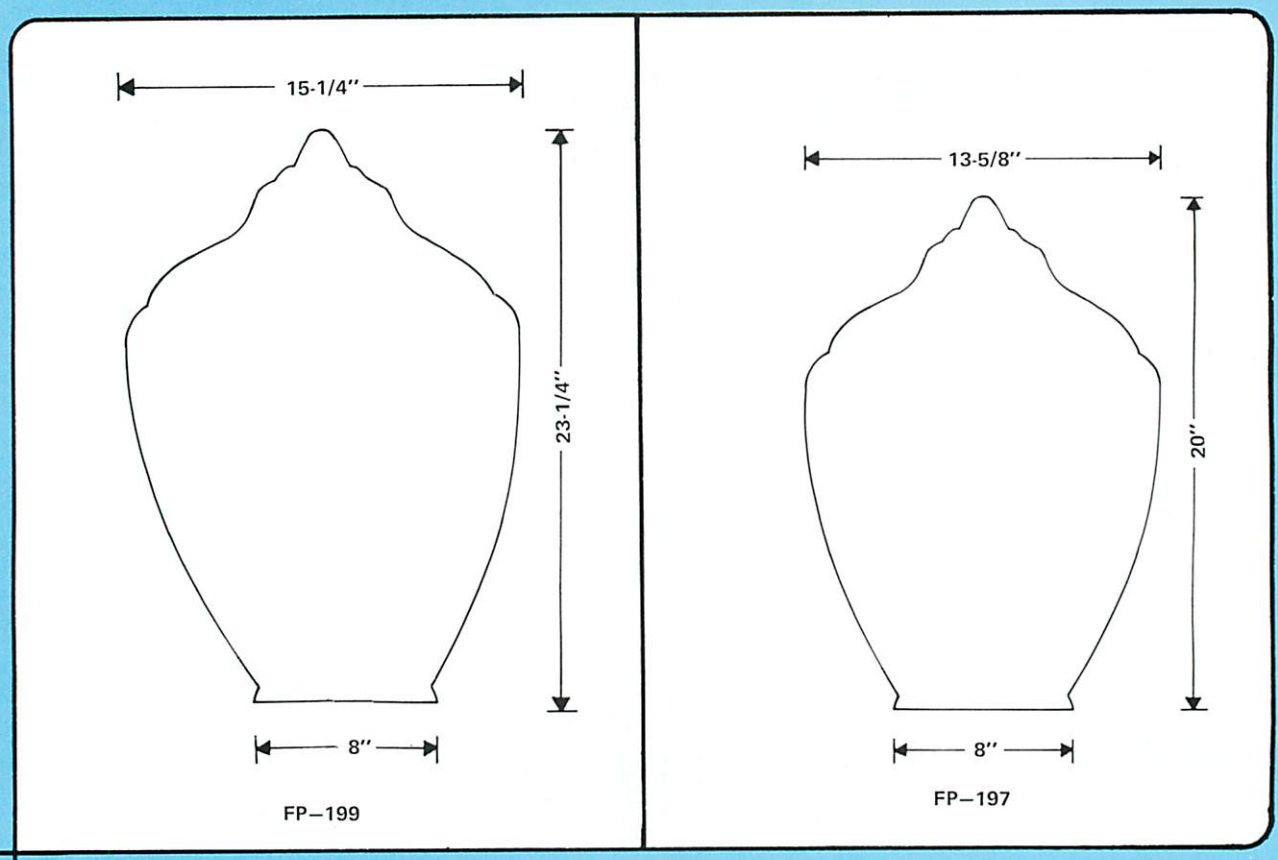

(All dimensions shown are nominal)

FORMED PLASTICS INC.
207 STONEHINGE LANE
CARLE PLACE, L.I., N.Y. 11514
(516) 334-2300

REPRESENTED BY:

2-PIECE PRISMATIC
POST TOP GLOBE
TYPE II/III AND V

FEATURES:

- ☐ Allows Type II/III or V light distribution
- ☐ High impact strength
- ☐ Shatterproof
- ☐ Glasslike appearance
- ☐ Lightweight (75% lighter than glass)
- ☐ Excellent light transmission
- ☐ Ultra-violet stabilized
- ☐ Reduces vandalism
- ☐ Eliminates hazards of broken glass

FORMED PLASTICS INC. 207 Stonehinge Lane • Carle Place, L.I., N.Y. 11514 • (516) 334-2300 • FAX (516) 334-2679
www.formedplastics.com • e-mail: inquiries@formedplastics.com

DIMENSIONS:

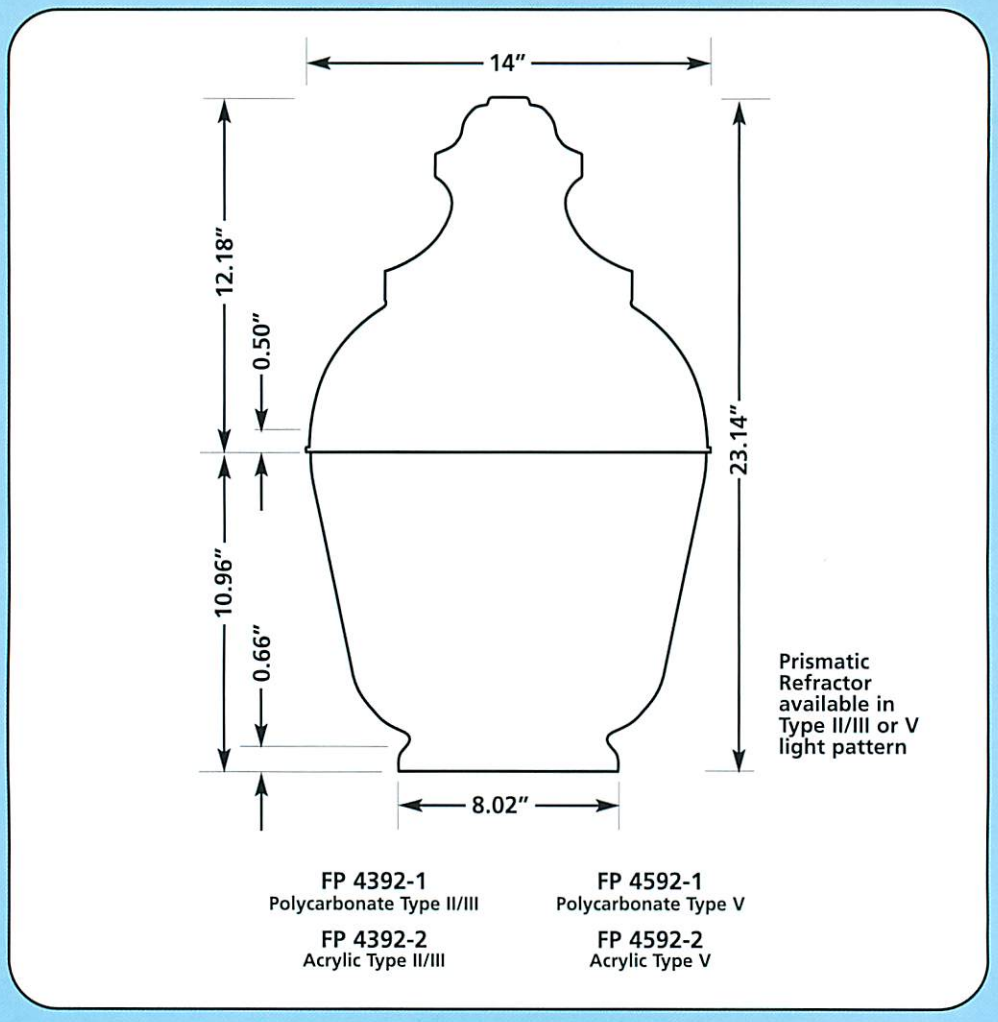

FP 4392-1
Polycarbonate Type II/III

FP 4592-1
Polycarbonate Type V

FP 4392-2
Acrylic Type II/III

FP 4592-2
Acrylic Type V

(All dimensions shown are nominal)

Available with FP 3318-4 Perforated Reflector

FORMED PLASTICS INC.
207 STONEHINGE LANE
CARLE PLACE, NY 11514
(516) 334-2300
www.formedplastics.com
e-mail: inquiries@formedplastics.com

REPRESENTED BY:

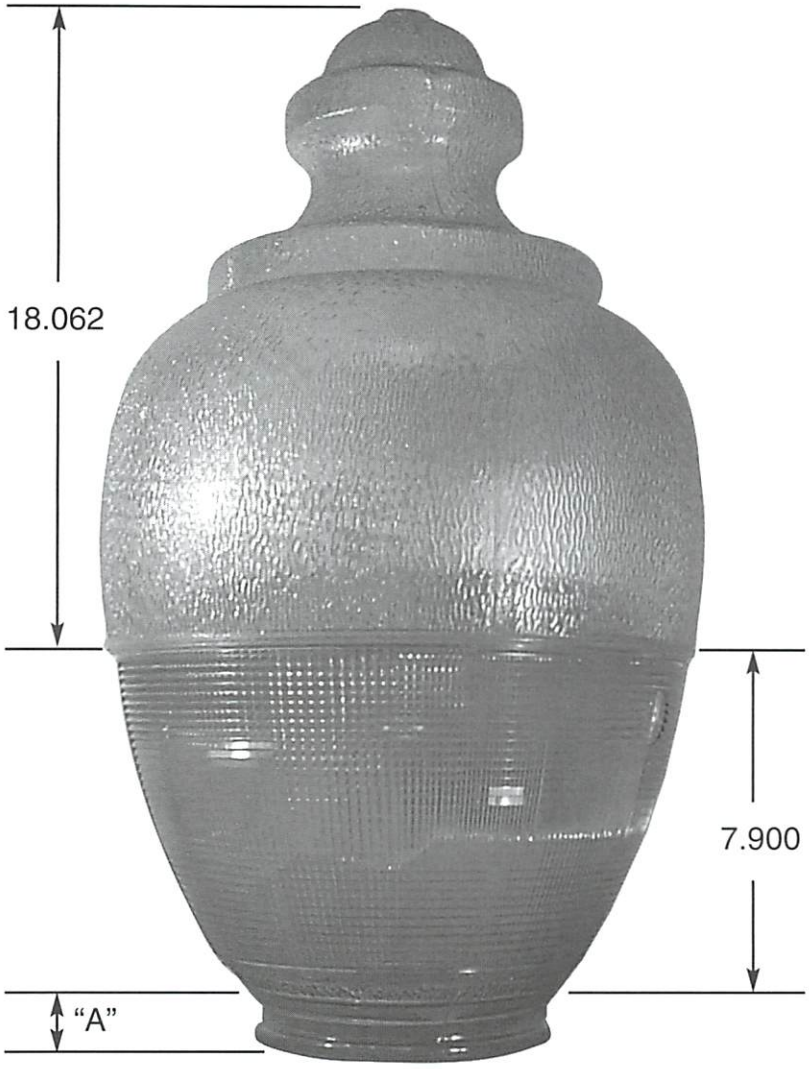

8" neck "A" dimension - 2.150" 9 1/8" neck "A" dimension - 1.350"

FP 123-1-8 Polycarbonate Type II/III light pattern 8" neck
FP 123-2-8 Acrylic Type II/III light pattern 8" neck
FP 123-1-9 Polycarbonate Type II/III light pattern 9 1/8" neck
FP 123-2-9 Acrylic Type II/III light pattern 9 1/8" neck

FP 125-1-8 Polycarbonate Type V light pattern 8" neck
FP 125-2-8 Acrylic Type V light pattern 8" neck
FP 125-1-9 Polycarbonate Type V light pattern 9 1/8" neck
FP 125-2-9 Acrylic Type V light pattern 9 1/8" neck

FP 3318-1 reflector is available as an option for this globe

PRISMATIC STREET LIGHT GLOBE	**FORMED PLASTICS INC.** 207 STONEHINGE LANE CARLE PLACE, L.I., N.Y. 11514 516/334-2300	Date 5/20/02 Part No. FP 123/125

CITY SERIES
POLYCARBONATE*
STREET LIGHT GLOBES
ROTATIONALLY MOLDED
TWO PIECE CONSTRUCTION

FP-8108

FP-6085

FP-2085

FEATURES:

- ☐ High impact strength
- ☐ Shatter proof
- ☐ Glasslike appearance
- ☐ Lightweight (75% lighter than glass)
- ☐ Excellent light transmission
- ☐ Ultra-violet stabilized
- ☐ Reduces vandalism
- ☐ Eliminates hazards of broken glass

*LEXAN—GENERAL ELECTRIC CO.
MAKROLON—MOBAY CHEMICAL CO.

FORMED PLASTICS INC. 207 Stonehinge Lane • Carle Place, L.I., N.Y. 11514 • (516) 334-2300 • FAX: (516) 334-2679

DIMENSIONS:

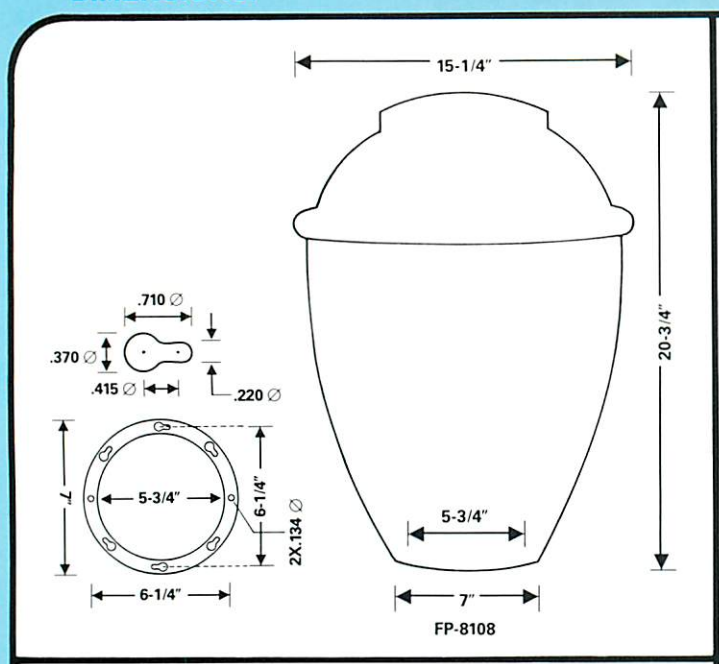

FP-8108

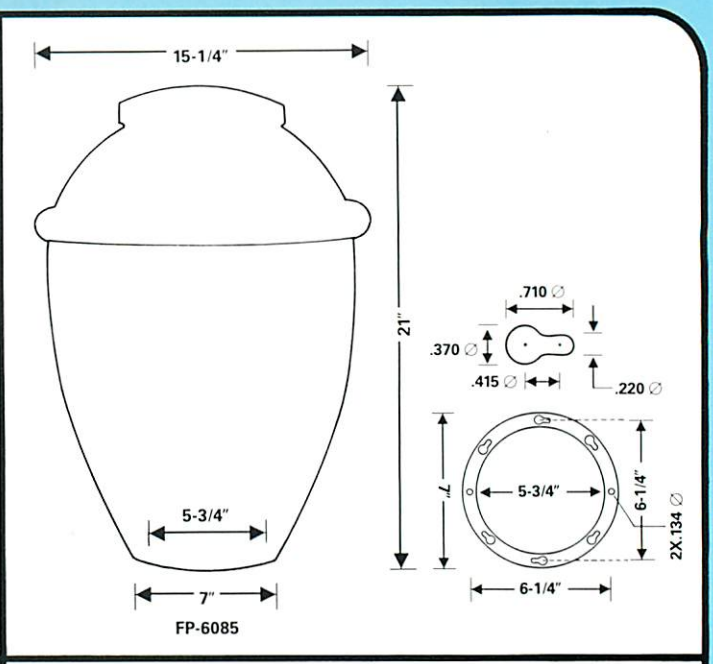

FP-6085

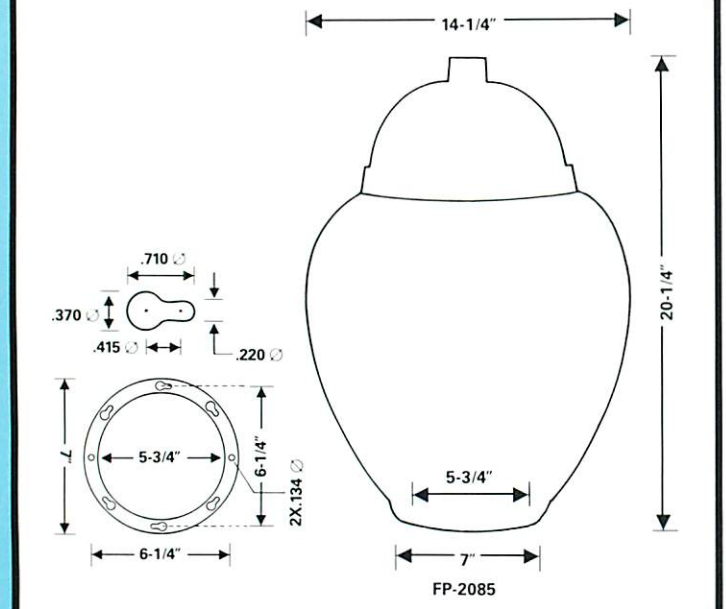

FP-2085

Available with FP-3715-8 aluminum adaptor for use on pole with 8″ base

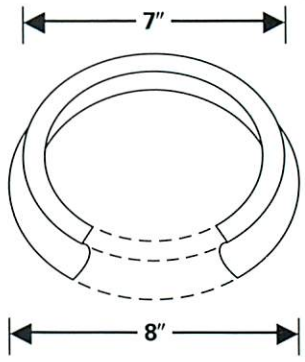

(All dimensions shown are nominal)

FORMED PLASTICS INC.

207 STONEHINGE LANE
CARLE PLACE, L.I., N.Y. 11514
(516) 334-2300

REPRESENTED BY:

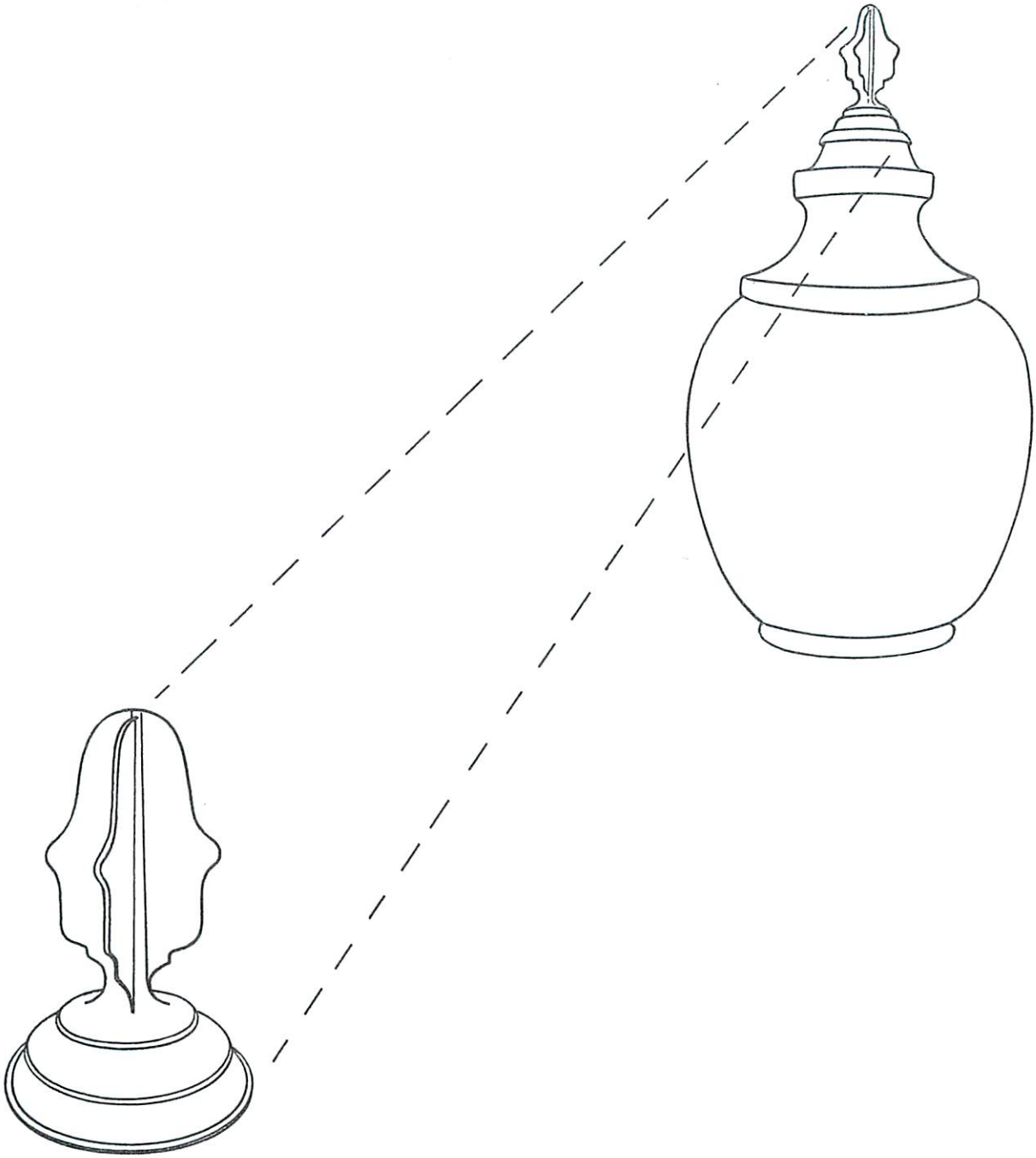

FP 110
FINIAL FOR POST TOP GLOBES

SUPPLIED WITH MOUNTING SCREW

GRAY POLYCARBONATE FINIAL FOR POST TOP GLOBES	**FORMED PLASTICS INC.** 207 STONEHINGE LANE CARLE PLACE, L.I., N.Y. 11514 516/334-2300	Date 7/1/79 Part No. FP 110

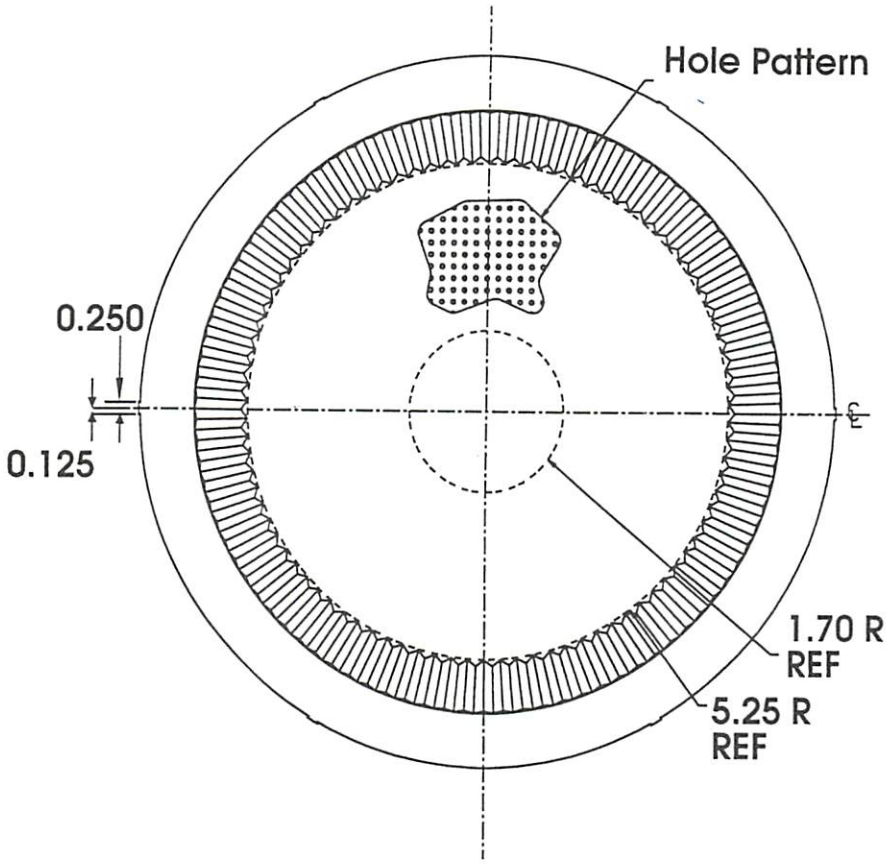

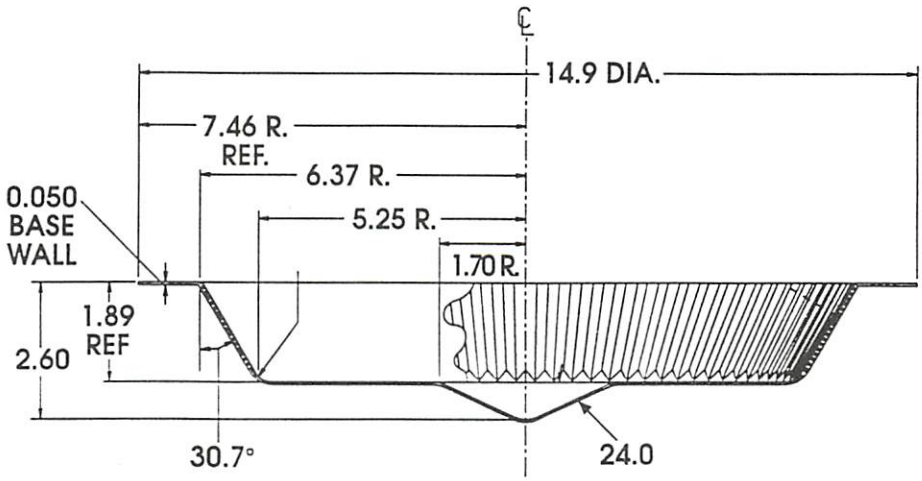

LITELID REFLECTOR FOR FP 318/518 AND FP 399/599 PRISMATIC POST TOP GLOBES	**FORMED PLASTICS, INC.** 207 STONEHINGE LANE CARLE PLACE, NY 11514 516-334-2300	DATE: 3/15/96 PART NO. FP 3318-1

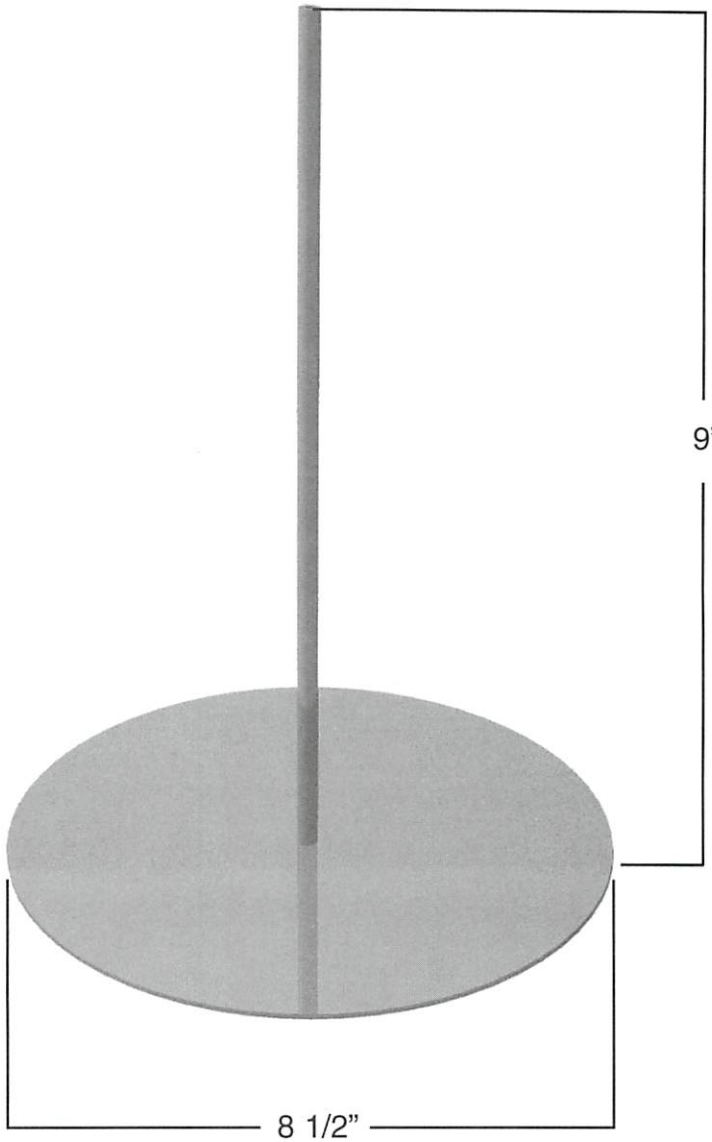

ASSEMBLED TO GLOBE
USING 1/4-20 ROUND SCREW AND
NEOPRENE WASHER

REFLECTOR FOR POST TOP GLOBES	**FORMED PLASTICS, INC.** 207 STONEHINGE LANE CARLE PLACE, NY 11514 516-334-2300	DATE: 3/15/96 PART NO. FP 3118-1

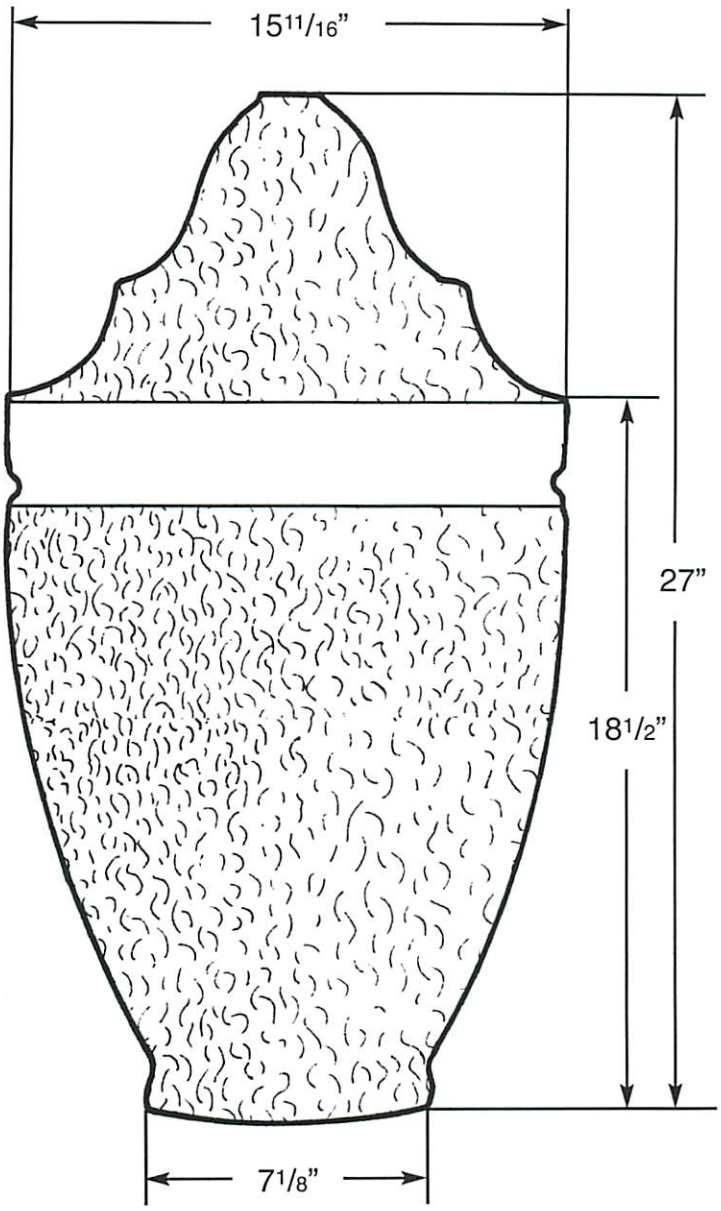

FP 224
POLYCARBONATE STREET LIGHT GLOBE

VANDAL RESISTANT POLYCARBONATE STREET LIGHT GLOBE	**FORMED PLASTICS INC.** 207 STONEHINGE LANE CARLE PLACE, L.I., N.Y. 11514 516/334-2300	Date	4/1/98
		Part No.	FP 224

FORMED PLASTICS INC.
207 STONEHINGE LANE, CARLE PLACE, NEW YORK / 11514 • 516 334-2300

August 1, 1977

SUGGESTED MAXIMUM WATTAGES - POST TOP

MODEL	*HIGH PRESSURE SODIUM OR MERCURY VAPOR*	*INCANDESCENT*
FP-107	*175 Watts*	*340 Watts*
FP-109	*100 "*	*200 "*
FP-118	*250 "*	*1000 "*
FP-192	*250 "*	*1000 "*
FP-197	*250 "*	*1000 "*
FP-199	*250 "*	*1000 "*

NOTES

1) *This wattage chart is for use as a general reference chart only. No warranty or guarantee is expressed or implied as only the user can determine the suitability of a product for this purpose.*

2) *Actual wattage ratings are influenced by many factors including Fixture Type, Bulb Location and Ambient Temperature.*

3) *The center of the light source should be located at the center of the sphere.*

E1

PENTA-HEAD LOCK

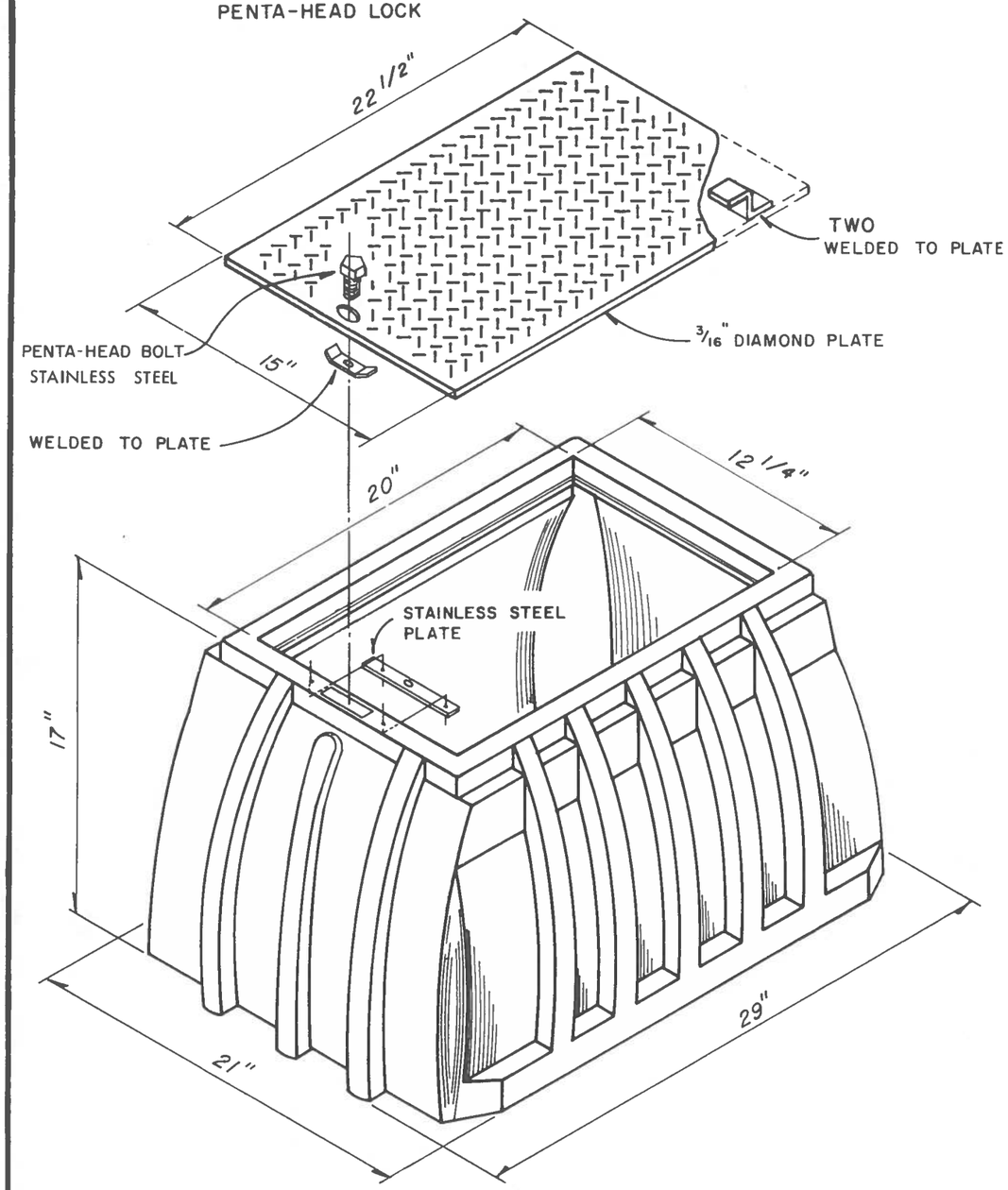

SIDE LOCK

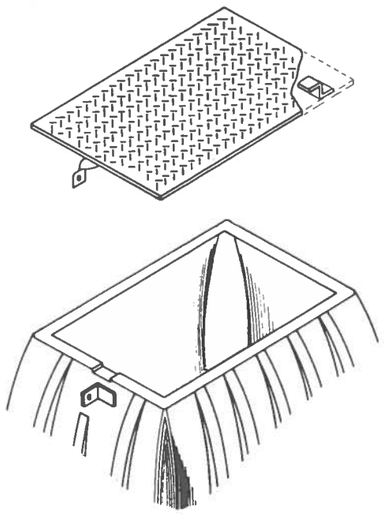

TOP LOCK

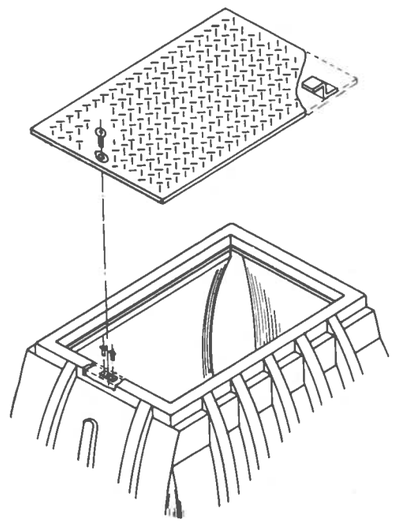

OPTIONAL BOTTOM OPENINGS

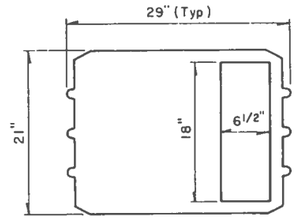

5232-IS (CUT-OUT ONE SIDE)

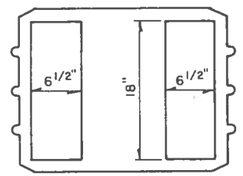

5232-2S (CUT-OUT TWO SIDES)

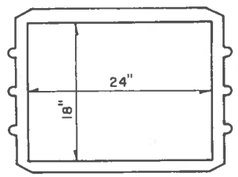

5232-NB (NO BOTTOM)
(AVAILABLE BUT NOT RECOMMENDED)

CODE	DESCRIPTION	REMARKS
NB	NO BOTTOM PIECE	SEE DRAWING
1S	CUT-OUT ON ONE SIDE	"
2S	CUT-OUTS ON TWO SIDES	"
SL	SIDE LOCK	"
PH	PENTA-HEAD LOCK	"
TL	RECESSED HEX-HEAD	BUTTON HEAD BOLT
EP	EPOXY PAINT	GREEN
GV	GALVANIZED	

ORDERING NOTES:

1 SHOW DESIRED BOTTOM STYLE
2 SHOW DESIRED LOCKING ARRANGEMENT
3 SHOW DESIRED DIAMOND PLATE FINISH

EXAMPLE : FP 5232-2S-PH-GV

SPECIAL NOTE:

CAN BE SUPPLIED WITH RIVETED GALVANIZED STEEL FRAME FOR INSTALLATION IN CONCRETE

APPROX. GROSS WEIGHT 42 LBS.

FORMED PLASTICS, INC.

207 STONEHINGE LANE
CARLE PLACE, L.I.N.Y. 11514

516 / 334-2300

Hi Density Polyethylene

SECONDARY SPLICE BOX

CAT. NO. 5232

REVISED 12 - 18 - 72

E 2

PENTA-HEAD LOCK

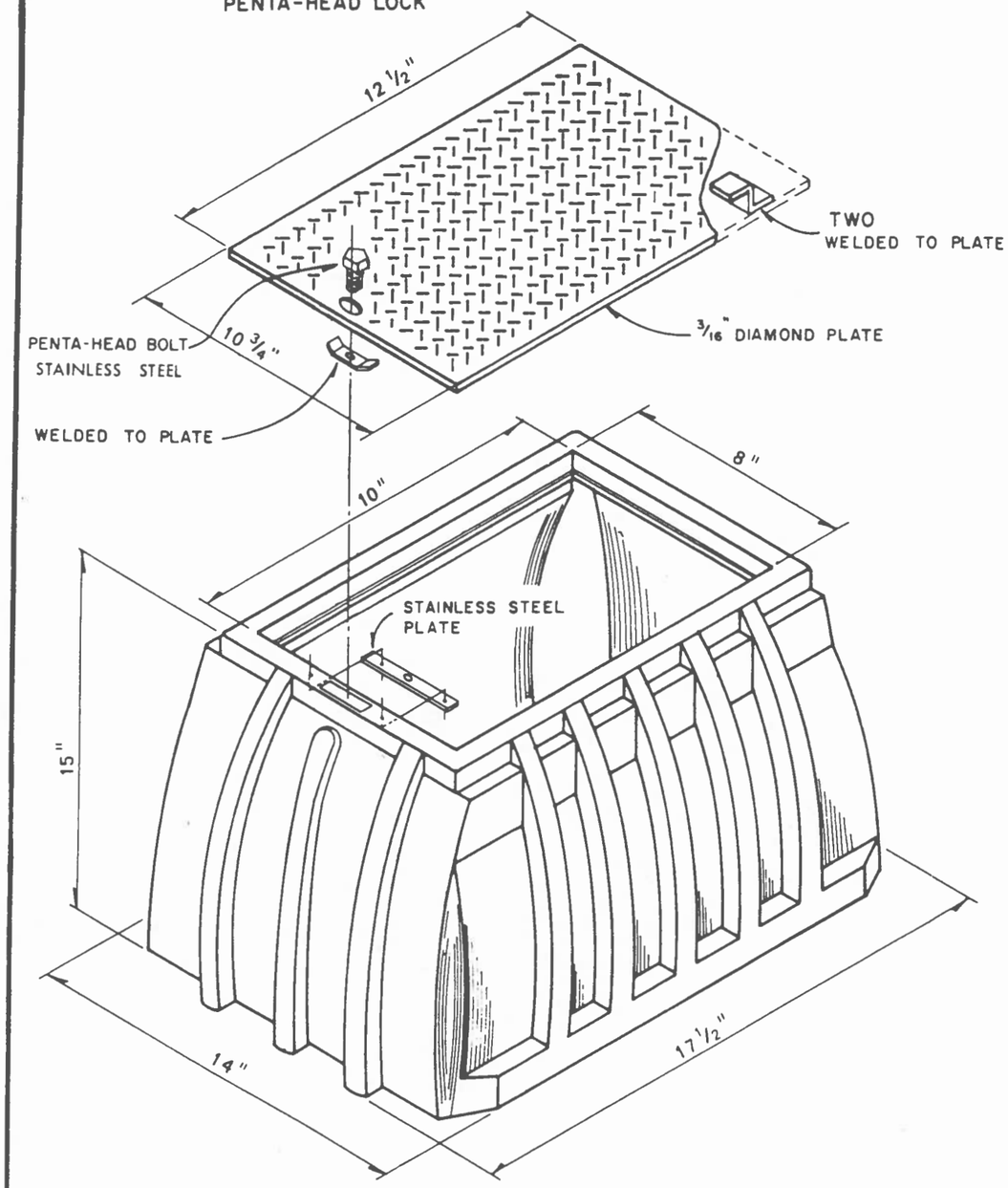

SIDE LOCK

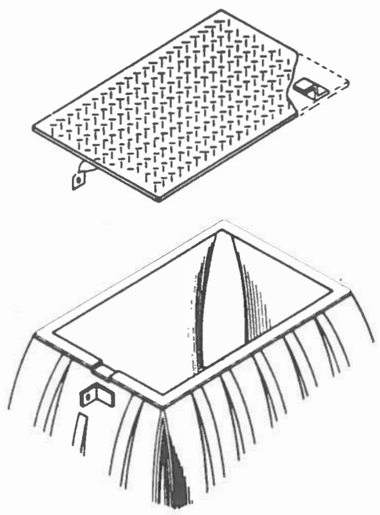

OPTIONAL BOTTOM OPENINGS

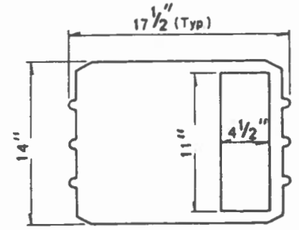

4121-1S (CUT-OUT ONE SIDE)

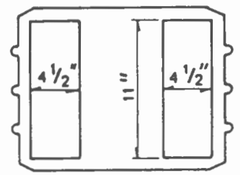

4121-2S (CUT-OUT TWO SIDES)

TOP LOCK

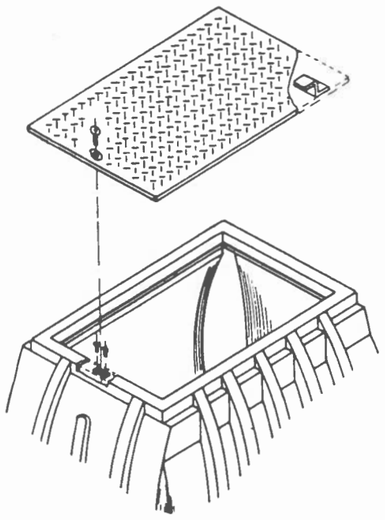

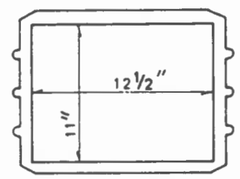

4121-NB (NO BOTTOM)
(AVAILABLE BUT NOT RECOMMENDED)

CODE	DESCRIPTION	REMARKS
NB	NO BOTTOM PIECE	SEE DRAWING
1S	CUT-OUT ON ONE SIDE	"
2S	CUT-OUTS ON TWO SIDES	"
SL	SIDE LOCK	"
PH	PENTA-HEAD LOCK	"
TL	RECESSED HEX-HEAD	BUTTON HEAD BOLT
EP	EPOXY PAINT	GREEN
GV	GALVANIZED	

ORDERING NOTES:

1 SHOW DESIRED BOTTOM STYLE
2 SHOW DESIRED LOCKING ARRANGEMENT
3 SHOW DESIRED DIAMOND PLATE FINISH

EXAMPLE : FP 4121-2S-PH-GV

SPECIAL NOTE:

CAN BE SUPPLIED WITH RIVETED GALVANIZED STEEL FRAME FOR INSTALLATION IN CONCRETE

FORMED PLASTICS, INC.

207 STONEHINGE LANE
CARLE PLACE, L.I.N.Y. 11514

516 / 334-2300

Hi Density Polyethylene

SECONDARY SPLICE BOX

CAT. NO. 4121

8 - 19 - 75